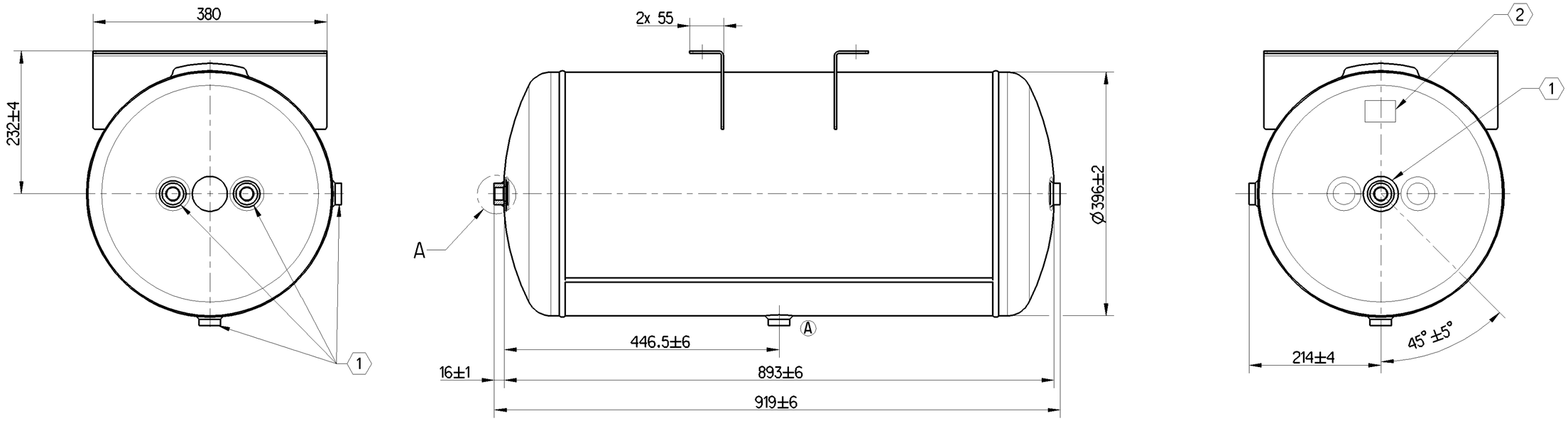

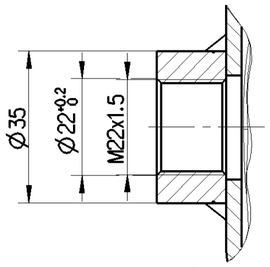

A
1:1
Ⓐ 5 PLACES

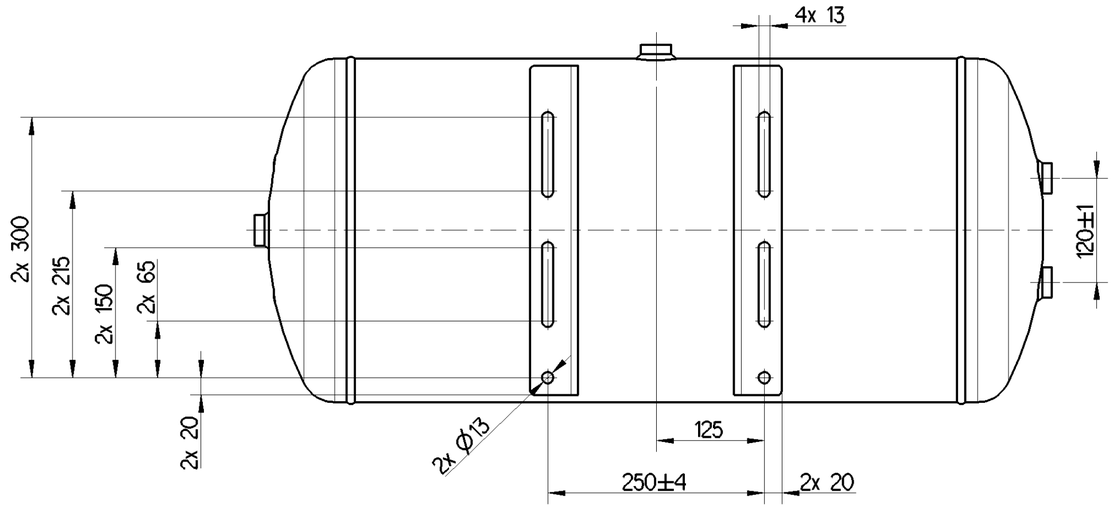

1 METRIC PORT M22x1.5,
COMPATIBLE FOR METRIC FACE SEALING

2 PART IDENTIFICATION LABEL

GENERAL SPECIFICATION ACCORDING TO EN 286-2:1992

SL.NO.	NOTES	
1	CAPACITY	100 Litres
2	WORKING PRESSURE	11 bar
3	TEMPERATURE RANGE	-50°C TO +65°C
4	MATERIAL	ALUMINIUM
5	PERMISSIBLE INSTALLATION	DRAIN VALVE SHOULD FACE DOWNWARDS IN VEHICLE ASSEMBLY
6	RECOMMENDED MOUNTING PITCH	HORIZONTAL : 250 mm VERTICAL (DISTANCE FROM Ø13 HOLE) 300 mm (2 points) 65 & 300 mm (3 points) 150 & 300 mm (3 points)
7	VIBRATION SPECIFICATION FOR THE RECOMMENDED MOUNTING PITCH	FREQUENCY 25 Hz ACCELERATION 6g

2

SUPPLIER NAME

TYPE	9TA3961004-B-1
WABCO	950 000 900 0
T min -50°C	T max +65°C
Vol. 100 litres	Ps 11 bar
Norm.	EN 286-2:1992
Prod. Date	YYYYMMDD & S.No.

General Specification: JED-334-1 , Size ISO 14405 LP
Further Technical Data:
Doc. Code: Sheet: To

General Tolerances JED-261

Class 1)		Range of Nominal Dimensions (± mm) ≤ 50	> 50 ≤ 180	> 180 ≤ 400	> 400	∢
Fine		0.5	1.0	1.5	2.0	±3°
Medium		1.0	2.0	3.0	4.0	
Coarse	X	2.0	3.5	5.0	6.5	

Tapped Holes acc. ISO 4039-1
1) Tolerance Class Applied Crossmarked

Copyright WABCO®

	Date	Signature
Drawn	2020-12-29	Christosolomon D
Checked	2020-12-29	Rohinikumar T
Expert	Sahul Hameed	

WABCO
AIR RESERVOIR

Mass	Scale	Material No.	Date of first issue: 2019-10-16
13.0 KG	1:5 1:1	950 000 900 0	Doc.Code 005 · Language EN · Sheet 1/1
Size A 2	CAD System CREO	ECN-No. 506601 · Revision 2x A · Techn. Resp. 5060	Replacement for

100mm

Toute Communication ou reproduction de ce document, toute exploitation ou communication de son contenu sont interdites, sauf autorisation expresse. Tout manquement à cette règle constitue un délit, engage son auteur au versement de dommages et intérêts. Tous droits de propriété industrielle réservés, notamment en matière de brevets et de modèles.

Weitergabe sowie Vervielfältigung dieser Unterlage, Verwertung und Mitteilung ihres Inhalts nicht gestattet, soweit nicht ausdrücklich zugestanden. Zuwiderhandlungen stellen einen offensichtlichen Missbrauch dar und verpflichten zu Schadenersatz. Alle Rechte fuer den Fall der Patenterteilung oder Gebrauchsmuster-Eintragung vorbehalten.

Non è permesso consegnare a terzi o riprodurre questo documento, né utilizzarne il contenuto o renderlo comunque noto a terzi senza autorizzazione esplicita. Ogni infrazione costituirà un evidente abuso e comporterà il risarcimento dei danni subiti. E' fatta riserva di tutti i diritti derivanti da brevetti o modelli.

Copying of this document and giving it to others and the use or communication of the contents thereof, are forbidden without express authority. Contravention of this restriction will constitute an evident abuse and result in a liability to the payment of damages. All rights are reserved in the event of the grant of patent or registration of a utility model or design. This document is the subject of copyright.