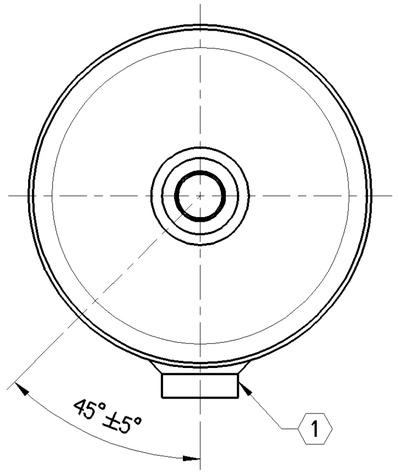

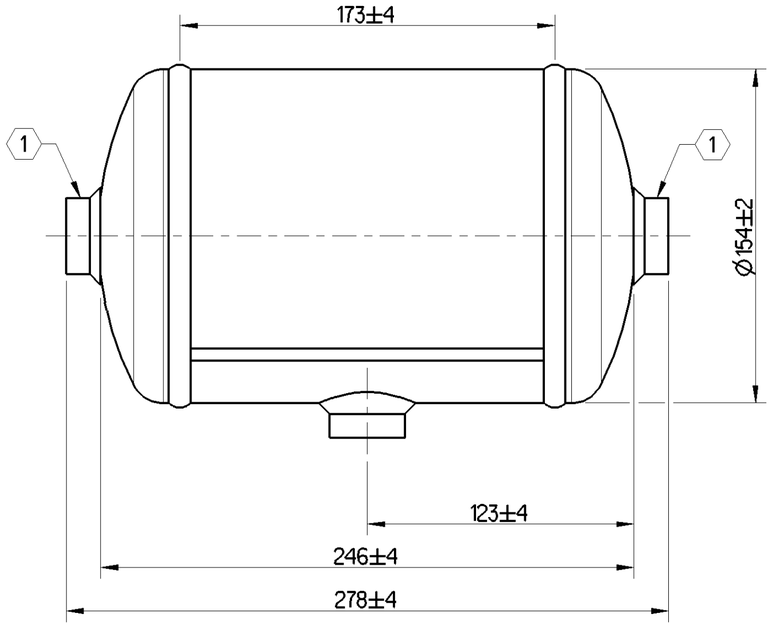

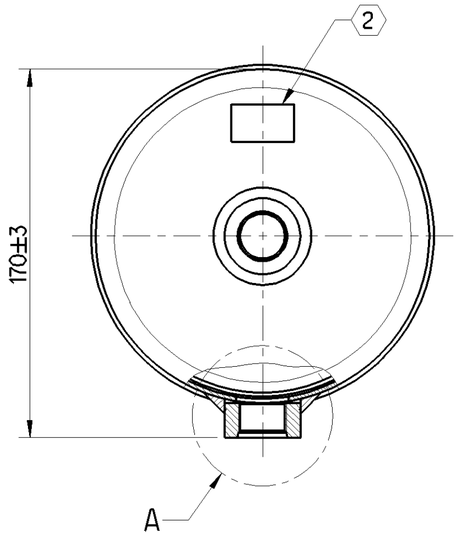

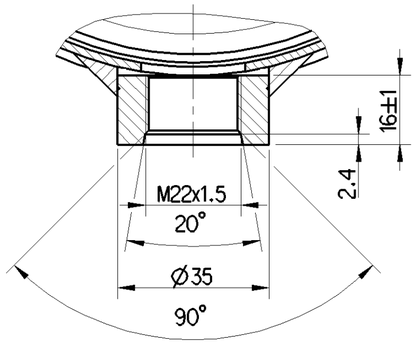

A
1:1

1 METRIC PORT M22x1.5
ACCORDING TO ISO 4039-2

2 PART IDENTIFICATION LABEL

GENERAL SPECIFICATION ACCORDING TO EN 286-2:1992

SL.NO.	NOTES	
1	CAPACITY	4 Litres
2	WORKING PRESSURE	15.5 bar
3	TEMPERATURE RANGE	-50°C TO +100°C
4	MATERIAL	STEEL
5	SURFACE PROTECTION	PAINT - BLACK (RAL 9005)
6	CORROSION RESISTANCE	480 hours ACCORDING TO ISO 9227
7	PERMISSIBLE INSTALLATION	DRAIN VALVE SHOULD FACE DOWNWARDS IN VEHICLE ASSEMBLY

2

ORSAN	
TYPE	6T1540404-1
WABCO	9502040040
T min -50°C	T max +100°C
Vol 4 litres	Ps 15.5 bar
Norm	EN 286-2:1992
Prod. Date	YYYYMMDD & S.No.

General Specification: JED-334-1 , Size ISO 14405 LP
Further Technical Data:
Doc. Code: Sheet: To

General Tolerances JED-261

Class 1)		Range of Nominal Dimensions (± mm) ≤ 50	> 50 ≤ 180	> 180 ≤ 400	> 400	∢
Fine		0.5	1.0	1.5	2.0	±3°
Medium		1.0	2.0	3.0	4.0	
Coarse	X	2.0	3.5	5.0	6.5	

Tapped Holes acc. ISO 4039-2 (A)
1) Tolerance Class Applied Crossmarked

Copyright WABCO®

	Date	Signature
Drawn	2020-09-16	Christosolomon D
Checked	2020-09-16	Rohinikumar T
Expert	Sahul Hameed	

WABCO

AIR RESERVOIR

Mass	Scale	Material No.	Date of first issue: 2020-09-11
2.7 KG	1:2 1:1	950 204 004 0	Doc.Code 005 / Language EN / Sheet 1/1
Size A 2	CAD System CREO		

ECN-No.	Revision	Techn. Resp.	Replacement for
-	1 A	5060	-

100mm

Toute Communication ou reproduction de ce document, toute exploitation ou communication de son contenu sont interdites, sauf autorisation expresse. Tout manquement à cette règle constitue un délit, évident et expose son auteur au versement de dommages et intérêts. Tous droits de propriété industrielle réservés, notamment en matière de brevets et de modèles.

Weitergabe sowie Vervielfältigung dieser Unterlage, Verwertung und Mitteilung ihres Inhalts nicht gestattet, soweit nicht ausdrücklich zugestanden. Zuwiderhandlungen stellen einen offensichtlichen Musterraub dar und verpflichten zu Schadenersatz. Alle Rechte für den Fall der Patenterteilung oder Gebrauchsmuster-Eintragung vorbehalten.

Non è permesso consegnare a terzi o riprodurre questo documento, né utilizzarne il contenuto o renderlo comunque noto a terzi senza autorizzazione esplicita. Ogni infrazione costituirà un evidente abuso e comporterà il risarcimento dei danni subiti. E' fatta riserva di tutti i diritti derivanti da brevetti o modelli.

Copying of this document and giving it to others and the use or communication of the contents thereof, are forbidden without express authority. Contravention of this restriction will constitute an evident abuse and result in a liability to the payment of damages. All rights are reserved in the event of the grant of patent or registration of a utility model or design. This document is the subject of copyright.