FIRST ANGLE PROJECTION

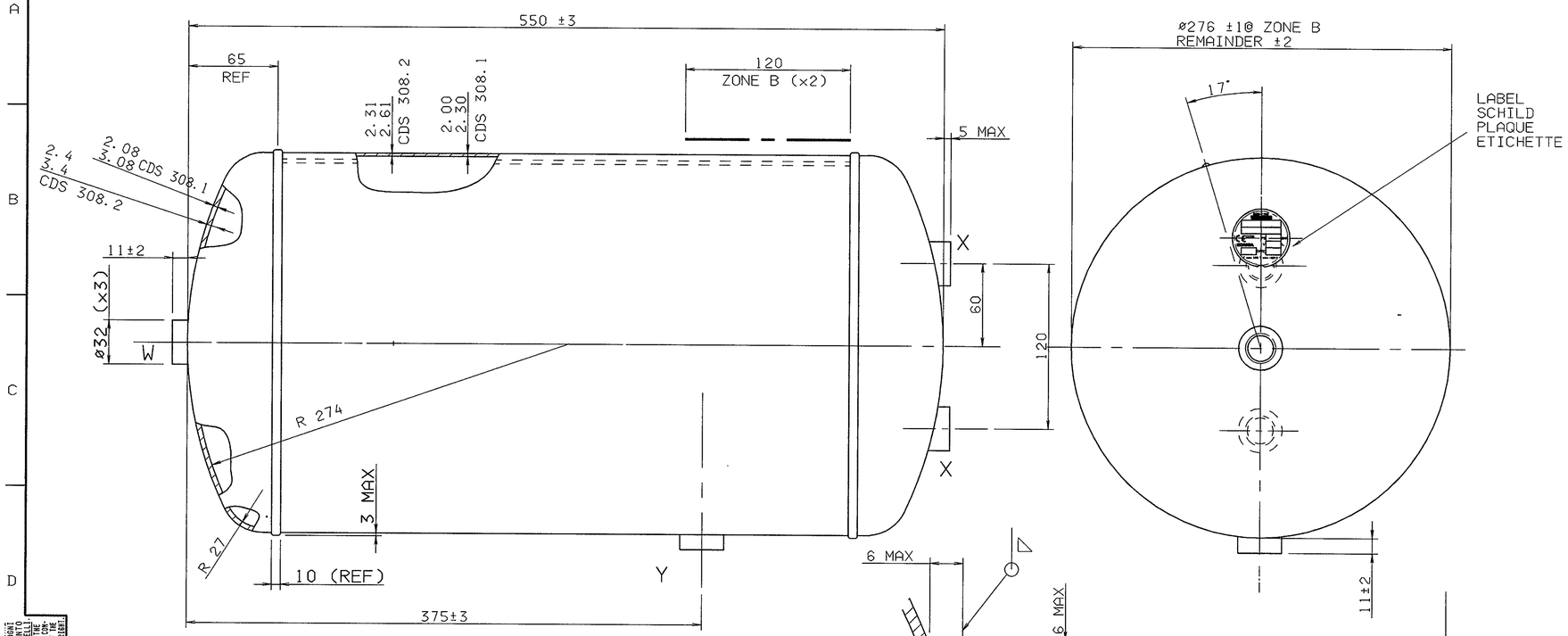

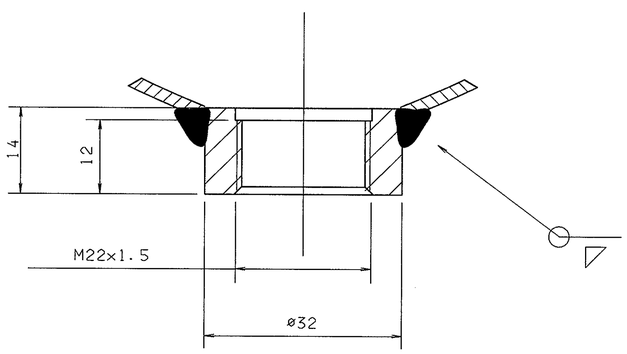

BOSS W & Y

893 302 302 4

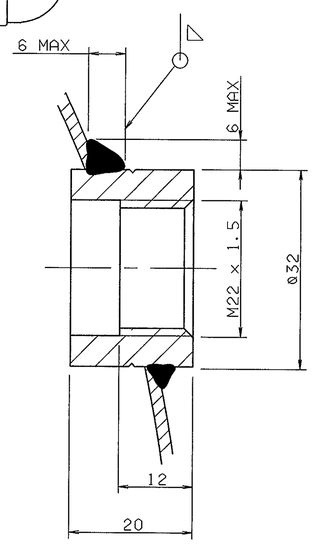

BOSS X (×2)

893 302 278 4

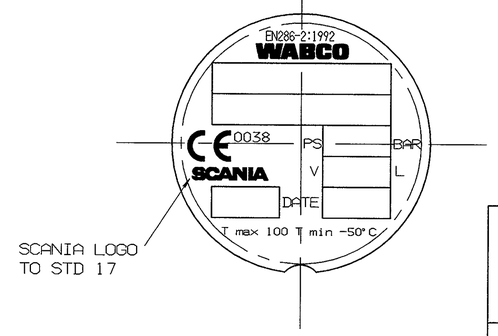

SCANIA LOGO
TO STD 17

LABEL (899 145 299 4)
DETAILS 2:1 WITH PAINT MASK
(899 145 301 4) REMOVED

EINZELHEITEN DES SCHILDES
BEI ABGENOMMENER SCHUTZFOLIE

DETAILS DE PLAQUE
SIGNALETIQUE AVEC CACHE
RETIRE

PARTICOLARI DELLE
ETICHETTE CON MASCHERINA
DI VERNICE RIMOSSA

CAPACITY 29 LITRES $^{+0.9}_{-0.4}$
TEMPERATURE RANGE -50°C TO +100°C
MAXIMUM WORKING PRESSURE 14 .5 bar

INHALT 29 LITER $^{+0.9}_{-0.4}$
TEMPERATURBEREICH -50°C BIS +100°C
MAXIMALER BETRIEBSDRUCK 14 .5 bar

CAPACITE 29 LITRES $^{+0.9}_{-0.4}$
GAMME DE TEMPERATURE -50°C A +100°C
PRESSION DE SERVICE MAXI 14 .5 bar

CAPACITA 29 LITRI $^{+0.9}_{-0.4}$
CAMPO TEMPERATURE -50°C FINO A +100°C
MAX PRESSIONE DI FUNZIONAMENTO 14 .5 bar

RESERVOIR CONCU CONFORMEMENT A NORME EN 286-2 (87/404/EEC) HOMOLOGUE:AVRIL 92 HOMOLOGATION No:(ANNEE)0038	SERBATOIO PROGETTATO IN CONFORMITA A NORMA EN 286-2 (87/404/EEC) APPROVAZIONE CONFERITA: APRILE 92 APPROVAZIONE No:(ANNO)0038
BEHALTER KONZIPIERT GEMASS E.N-NORTM EN 286 TEIL 2 (87/404/EEC) ZULLASSUNG ERTEILT:APRIL 92 ZULLASUNGS-Nr:(JAHR)0038	RESERVOIR DESIGNED IN ACCORDANCE WITH STANDARD EN 286 PT.2.(87/404/EEC) APPROVAL GRANTED:APRIL 92 APPROVAL NO:(YEAR)0038

VERNICIATURA ESTERNA SECONDO JED 745.
VERNICIATURA INTERNA SECONDO JED 434.1
PROCEDURA DI COLLAUDO 950 415 001 0 CODICE 623
MANUTENZIONE SECONDO 950 000 000 0 CODICE 635
NORMA MATERIALI 852 007 430 4
NORMA CONSTRUZIONE JED 743
SPESSORE DI MATERIALE 950 000 000 0, CODICE 648

AUSSENANSTRICH NACH JED 745.
INNENANSTRICH NACH JED 434.1
PRUEFVORCHRIFT 950 415 001 0 CODE 623
INSTANDHALTUNG NACH 950 000 000 0 CODE 635
WERKSTOFFSVORSCHRIFT 852 007 430 4
BAUVORSCHRIFT JED 743
MATERIAL DICKE 950 000 000 0, CODE 648

PEINTURE EXTERNE SELON JED 745
PEINTURE INTERNE SELON JED 434.1
METHODE D'ESSAI 950 415 001 0 CODE 623
ENTRETIEN SELON 950 000 000 0 CODE 635
SPECIFICATION MATERIAUX 852 007 430 4
SPECIFICATION CONSTRUCTION JED 743
EPAISSEUR DU MATERIEL 950 000 000 0,
CODE 648
EXTERNAL PAINT TO JED 745 (CDS 273/312)
INTERNAL PAINT TO JED 434.1 (CDS 307)
TEST PROCEDURE 950 415 001 0 CODE 623
MAINTAIN TO 950 000 000 0 CODE 635
MATERIAL SPECIFICATION 852 007 430 4
(CDS 308 & 308.1)
CONSTRUCTION SPECIFICATION JED 743 (CDS 306)
MATERIAL THICKNESS 950 000 000 0, CODE 648

DIMENSIONS IN MILLIMETRES

DRAWING PRODUCED ON CADAM
MANUAL CHANGES PROHIBITED

CONTENU SONT INTERDITES SAUF AUTORISATION EXPRESSE. TOUT MANQUEGRAT DE PROPRIETE INDUSTRIELLE OU LIBRE. NI TRANSMETTRE A DES TIERS, NI REPRODUIRE, NI UTILISER LE CONTENU DE CE DOCUMENT SANS AUTORISATION PREALABLE ECRITE. TOUS DROITS RESERVES EN CAS DE DEPOT DE BREVET.

WEITERGABE SOWIE VERVIELFALTIGUNG DIESER UNTERLAGE, VERWERTUNG UND MITTEILUNG ZULASSIGER INHALTS NICHT GESTATTET SOWEIT NICHT AUSDRUCKLICH ZUGESTANDEN. ZUWIDERHANDLUNGEN VERPFLICHTEN ZU SCHADENSERSATZ. ALLE RECHTE FUER DEN FALL DER PATENTERTEILUNG ODER GEBRAUCHSMUSTER-EINTRAGUNG VORBEHALTEN.

LA CONNOISSANCE NOTO A TERZI SENZA AUTORIZZAZIONE ESPLICITA. NON TOLERA UN EVIDENTE ABUSO E COMPORTERA IL RISARCIMENTO DEI DANNI. TUTTI I DIRITTI SONO RISERVATI IN CASO DI RILASCIO DI BREVETTO O MODELLO.

COPYING OF THIS DOCUMENT, AND GIVING IT TO OTHERS AND THE USE OR COMMUNICATION OF THE CONTENTS THEREOF, ARE FORBIDDEN WITHOUT EXPRESS AUTHORITY. CONTRAVENTION OF THIS RESTRICTION WILL CONSTITUTE A CLEAR VIOLATION OF THE LAW AND WILL ENTITLE THE ORIGINATOR TO DAMAGES. ALL RIGHTS ARE RESERVED IN THE EVENT OF A PATENT OR THE REGISTRATION OF A UTILITY MODEL OR DESIGN. THIS DOCUMENT IS THE SUBJECT OF COPYRIGHT.

FURTHER TECHNICAL DATA SEE							
IDENTIFICATION No.:							
CODE FOR DOCUMENT:		SHEET:	TO				
GENERAL TOLERANCES							
CLASS		RANGE OF NOMINAL DIMENSIONS (mm)					
	1)	≤50	> 50 ≤180	>180 ≤400	>400		
I		0.5	1	1.5	2	±1°	
II	X	1	2	3	4		
III		2	3.5	5	6.5		

1) TOLERANCE CLASS APPLIED CROSSMARKED

	L	
	K	
	J	
	H	
	G	
300804	F	021198
6501	E	260496
6161	D	260396
5964	C	021195
5935	B	021095
XXXX -	A	021095
ECN-No	REV	DATE

COPYRIGHT

DATE	SIGNATURE
021095	DRAWN. N. TINKLER
CHECKED	
EXPERT CODE	310

WABCO

AIR RESERVOIR
LUFTBEHAELTER
RESERVOIR D'AIR
SERBATOIO D'ARIA

30 L
ø276

MASS	SCALE	PRODUCT SPECIFICATION No	DOCUMENT CODE	SHEET
9.5kg	1:2	950 730 005 0	605	1/1
SIZE	T.R.I			
A1	300			

PROD-GROUP	SHAPE CODE	PRODUCT TYPE	REPLACEMENT FOR
506		002	

100 mm

SCANIA 1357950