PART CODE	MATERIAL	SURFACE PROTECTION
XVII	STEEL	NO TREATMENT
XVI	CAST IRON	PLATED
XV	STEEL	ZINC IRON PLATED
XIV	CAST IRON	NO TREATMENT
XIII	ZINC ALLOY	ANODISED
XII	PLASTIC	NO TREATMENT
XI	RUBBER	NO TREATMENT
X	STAINLESS STEEL	NO TREATMENT
IX	BRASS	NO TREATMENT
VIII	ZINC ALLOY	CHROMATED
VII	ALUMINIUM ALLOY	ANODISED
VI	ALUMINIUM ALLOY	CHROMATED
V	CAST IRON	PAINTED
IV	STEEL	POWDER COATED
III	STEEL	PAINTED
II	STEEL	PHOSPHATED
I	STEEL	ZINC PLATED

<1>	SAFETY CHARACTERISTICS	0
<2>	SIGNIFICANT CHARACTERISTICS	0

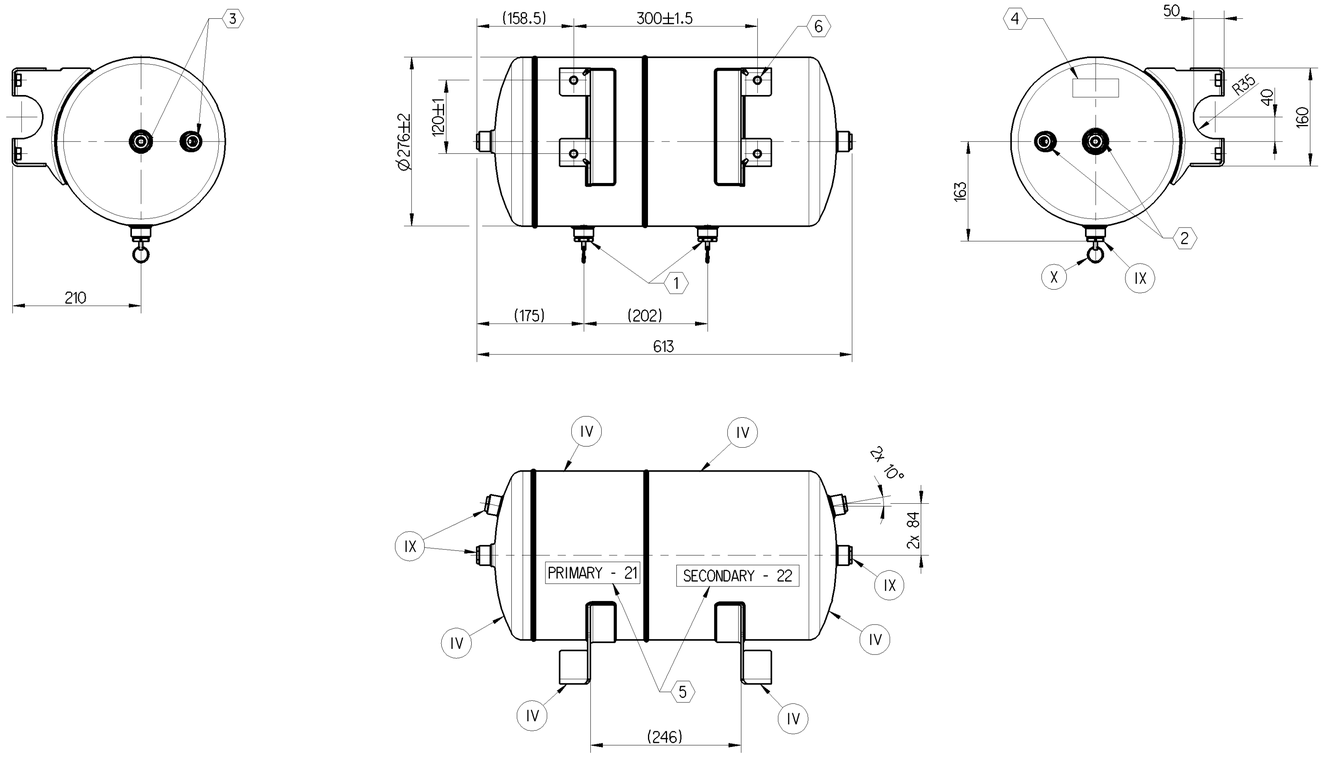

SL.NO.	NOTES	
1	PRODUCT FUNCTION AND RELIABILITY	
1.1	CAPACITY	15 +15 LITRES
1.2	NORMAL WORKING PRESSURE	10 bar
1.3	THERMAL RANGE OF APPLICATION	-40°C TO +80°C
1.4	CORROSION RESISTANCE	300 HOURS OF NSS IS APPLICABLE FOR INSIDE & OUTSIDE RESERVOIR 240 HOURS OF NSS IS APPLICABLE FOR ADAPTORS
2	SERVICE LIFE TO FIRST OVERHAUL 3 YEARS/300000 km WHICHEVER IS EARLIER FOR AIR DRYER OR DDU FITTED VEHICLES.	
3	DRAIN VALVE IS FITTED WITH CLOSURE SLEEVE FOR STORAGE AND TRANSIT PURPOSE	
4	CLOSURE PLUG SHOULD BE KEPT IN PORT UNTIL THE HOSE ASSEMBLY IS CONNECTED.	
5	INSTALLATION GUIDELINE	AS PER PERMISSIBLE INSTALLATION POSITION
6	SHELL AND END COVER THICKNESS	2 mm
7	AIR TANK TO SATISFY TS:75049	
8	VIBRATION SPECIFICATION	AIRTANK SHOULD PASS VIBRATION TEST OF FREQUENCY 67 Hz AND ACCELERATION 5g FOR A DURATION OF 8 HOURS (4+2+2 IN MUTUAL PERPENDICULAR ORIENTATIONS) AT UNPRESSURISED CONDITION

1. DRAIN VALVE (FOR DRAINING, THE STEM IS TO BE TILTED BY PULLING THE RING)
   DRAIN PORT M22X1.5, HEX. 27
2. INLET / DELIVERY CONNECTION FOR PRIMARY CIRCUIT, M22X1.5, HEX.24
   TO SUIT VOSS SYSTEMS 230
3. INLET / DELIVERY CONNECTION FOR SECONDARY CIRCUIT, M22X1.5, HEX.24
   TO SUIT VOSS SYSTEMS 230
4. WABCO PART No, CUSTOMER PART No. AND CAPACITY DETAILS ARE SHOWN HERE.
5. PARTITION IDENTIFICATION STICKER
6. MOUNTING NUT M12x1.75, (4 PLACES)

PERMISSIBLE INSTALLATION POSITION

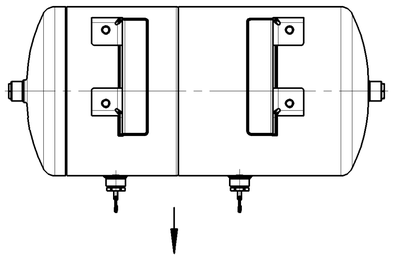

DRAIN VALVE SHOULD BE IN DOWNWARD DIRECTION IN VEHICLE ASSEMBLY

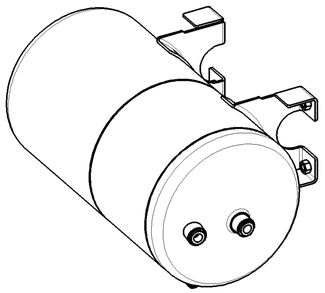

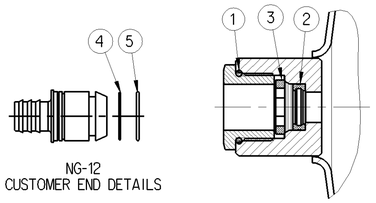

NG-12
CUSTOMER END DETAILS

TML PART NO. 264143700165N FOR
REPAIR KIT 300003124 (MSP 3/124) CONSISTS OF ITEM SHOWN

ITEM No.	CUSTOMER PART No.	WIN PART No.	DESCRIPTION	QTY
1	280943707807N	8979803224	O-RING	1
2	284633998703N	8953700044	SPRING RETAINER	1
3	284633998704N	8952266974	RETAINING RING	1
4	284633995322N	8979801464	O-RING	1
5	284633995323N	8979801534	O-RING	1
REPAIR KIT REQUIRED IS MAXIMUM 4 IN QUANTITY				

THREAD TYPE	PERMISSIBLE TORQUE
1	54±6 Nm
2 & 3	10±1 Nm
6	72±4 Nm

General Specification: JED-334-1 , Size ISO 14405 LP						
Further Technical Data: Product specfication						
Doc. Code: 035			Sheet: 1 To 5			
General Tolerances JED-261						
Class 1)		Range of Nominal Dimensions (± mm) ≤ 50	> 50 ≤ 180	> 180 ≤ 400	> 400	∢
Fine		0.5	1.0	1.5	2.0	±3°
Medium		1.0	2.0	3.0	4.0	
Coarse	X	2.0	3.5	5.0	6.5	
Tapped Holes acc.						
1) Tolerance Class Applied Crossmarked						

Copyright WABCO®

Date	Signature
Drawn 2018-08-10	Sudhagar
Checked 2018-08-13	Rohinikumar
Expert	Murugan S

WABCO

AIR RESERVOIR 15 +15 LITRES

Mass	Scale	Material No.	Date of first issue: 2018-08-13		
12.3 KG	1:5	950 750 305 0	Doc.-Code 005	Language EN	Sheet 1/1
Size A 1	CAD System CREO	ECN-No. -	Revision - -	Techn. Resp. 5060_WIN	Replacement for -

100mm

Toute Communication ou reproduction de ce document, toute exploitation ou communication de son contenu sont interdites, sauf autorisation écrite. Tous droits de propriété industrielle réservés, notamment en matière de brevets et de modèles.
Weitergabe sowie Vervielfältigung dieser Unterlage, Verwertung und Mitteilung ihres Inhalts nicht gestattet, soweit nicht ausdrücklich zugesichert. Gewerbliche Schutzrechte, insbesondere Patent- und Gebrauchsmusterrechte, sind vorbehalten.
Non è permesso consegnare o fare la riproduzione ulteriore di questo documento, né utilizzarne il contenuto o renderlo comunque noto a terzi senza esplicita autorizzazione. Si riservano i diritti di proprietà industriale, in particolare quelli di brevetto o modello.
Copying of this document and giving it to others and the use or communication of the contents thereof, are forbidden without express authority. Industrial property rights are reserved, in particular those of patent or registration of a utility model or design. This document is the subject of copyright.
Alle Rechte, auch für den Fall einer Patenterteilung oder Gebrauchsmustereintragung vorbehalten.
All rights are reserved in the event of the grant of patent or registration of a utility model or design. This document is the subject of copyright.