VOLUME: VOLUMEN: VOLUME: VOLUME:	20 L
WORKING PRESSURE: BETRIEBSDRUCK: Ps PRESSION D'UTILISATION: PRESSIONE DI LAVORO:	12.5 BAR
TEMPERATURE RANGE: TEMPERATURBEREICH: MIN/MAX PLAGE DE TEMPERATURES: CAMPO DI TEMPERATURA:	-50/100 °C
MATERIAL: WERKSTOFF: MATIERE: MATERIALE:	STEEL STAHL ACIER ACCIAIO
SURFACE PROTECTION/COLOR: OBERFLACHENSCHUTZ/FARBE: PROTECTION DE SURFACE/COULEUR: PROTEZIONE SUPERFICI/COLORE:	PAINT/BLACK LACK/SCHWARZ PEINTURE/NOIR VERNICE/NERO

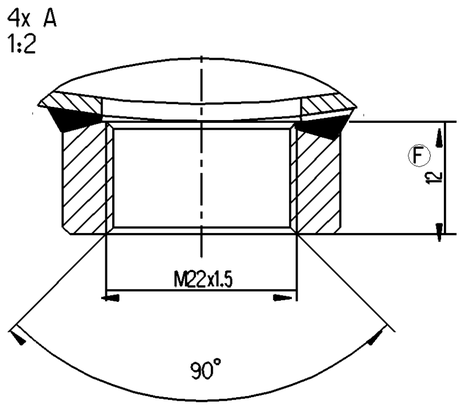

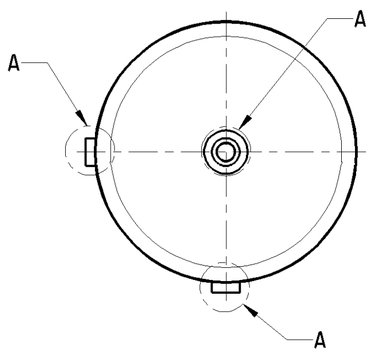

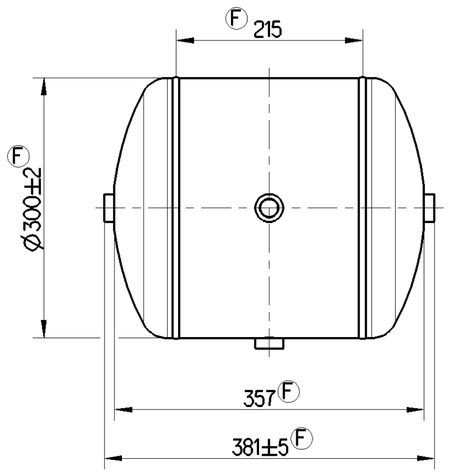

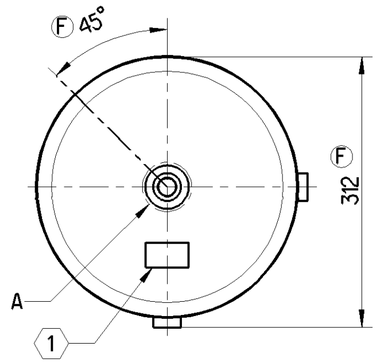

F 1 IDENTIFICATION LABEL

(ACCORDING TO GENERAL SPECIFICATION EN 286-2)

General Specification: JED-334-1 , Size ISO 14405 LP						
Further Technical Data:						
Doc. Code:			Sheet:	To		
General Tolerances JED-261						
		Range of Nominal Dimensions (± mm)				
Class 1)		≤ 50	> 50 ≤ 180	> 180 ≤ 400	> 400	∢
Fine		0.5	1.0	1.5	2.0	±3°
Medium		1.0	2.0	3.0	4.0	
Coarse	X	2.0	3.5	5.0	6.5	
Tapped Holes acc. JED-152						
1) Tolerance Class Applied Crossmarked						

Copyright WABCO®

Date	Signature
Drawn 2021-06-12	Christosolomon D
Checked 2021-06-12	Rohinikumar T
Expert	Sahul hameed

WABCO

AIR RESERVOIR

Mass	Scale	Material No.	Date of first issue: 2007-09-06		
F 6.9 KG	1:5 1:2	950 820 001 0	Doc.Code 005	Language ML	Sheet 1/1
Size A 2	CAD System CREO	ECN-No. 502042	Revision 9x F	Techn. Resp. 5060	Replacement for

100mm

Non è permesso consegnare a terzi o riprodurre questo documento, né utilizzarne il contenuto o renderlo comunque noto a terzi senza autorizzazione scritta. Ogni infrazione costituirà un evidente abuso e comporterà il risarcimento dei danni subiti. E' fatta riserva di tutti i diritti derivanti da brevetti o modelli.

Copying of this document and giving it to others and the use or communication of the contents thereof, are forbidden without express authority. Contravention of this restriction will constitute an evident abuse and result in a liability to the payment of damages. All rights are reserved in the event of the grant of patent or registration of a utility model or design. This document is the subject of copyright.

Toute Communication ou reproduction de ce document, toute exploitation ou communication de son contenu sont interdites, sauf autorisation expresse. Tout manquement à cette règle constitue un abus évident et expose son auteur au versement de dommages et interêts. Tous droits de propriété industrielle réservés, notamment en matière de brevets et de modèles.

Weitergabe sowie Vervielfältigung dieser Unterlage, Verwertung und Mitteilung ihres Inhalts nicht gestattet, soweit nicht ausdrücklich zugestanden. Zuwiderhandlungen stellen einen offensichtlichen Mißbrauch dar und verpflichten zu Schadenersatz. Alle Rechte für den Fall der Patenterteilung oder Gebrauchsmuster-Eintragung vorbehalten.