VOLUME: VOLUMEN: VOLUME: VOLUME:	4 L
WORKING PRESSURE: BETRIEBSDRUCK: Ps PRESSION D'UTILISATION: PRESSIONE DI LAVORO:	12,5 BAR
TEMPERATURE RANGE: TEMPERATURBEREICH: MIN/MAX PLAGE DE TEMPERATURES: CAMPO DI TEMPERATURA:	-50/100 °C
MATERIAL: WERKSTOFF: MATIERE: MATERIALE:	STEEL STAHL ACIER ACCIAIO
SURFACE PROTECTION/COLOR: OBERFLACHENSCHUTZ/FARBE: PROTECTION DE SURFACE/COULEUR: PROTEZIONE SUPERFICI/COLORE:	PAINT/BLACK EN 286-2 LACK/SCHWARZ PEINTURE/NOIR VERNICE/NERO

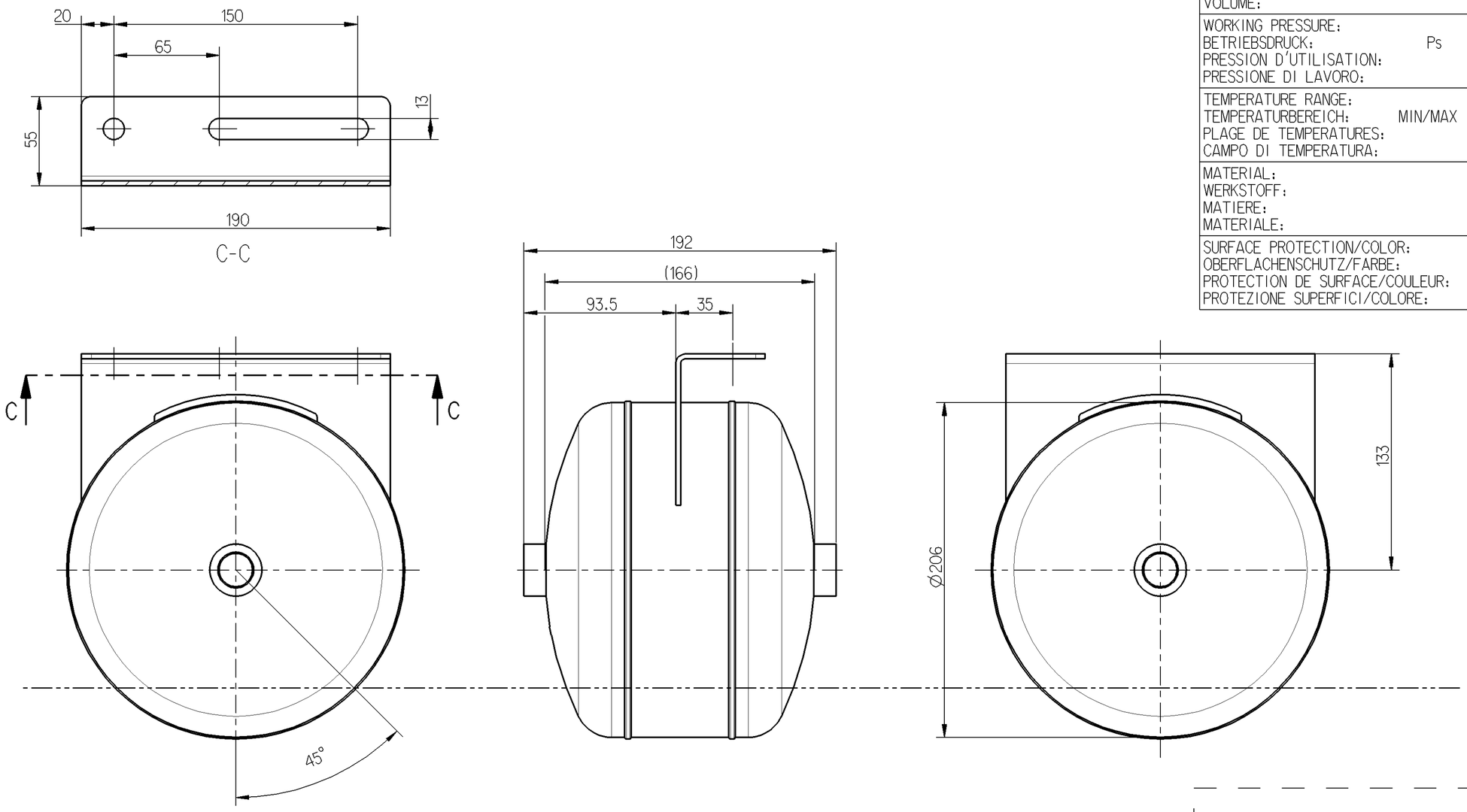

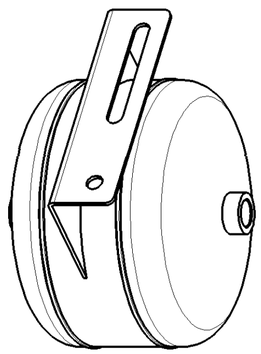

General Specification: JED-334-O						
Further Technical Data:						
Doc. Code:			Sheet:		To	
General Tolerances JED-261						
Class 1)	Range of Nominal Dimensions (± mm)					∢
	≤ 50	> 50 ≤ 180	> 180 ≤ 400	> 400		
Fine	0.5	1.0	1.5	2.0		
Medium X	1.0	2.0	3.0	4.0		±3°
Coarse	2.0	3.5	5.0	6.5		
Tapped Holes acc.						
1) Tolerance Class Applied Crossmarked						

DCN-No.	Rev.	Date
118905	- E	2008-11-05
State of Revision		

Copyright WABCO®

	Date	Signature
Drawn	2008-11-05	J. Cwiokalski
Checked	2007-09-10	P. Mach
Expert		P. Mach

WABCO

AIR RESERVOIR
LUFTBEHAELTER
RESERVOIR D'AIR
SERBATOIO D'AIRA

Mass	Scale	Material No.	WABCO Id. No.: 9510021330		
3.4 KG	1:2	951 002 133 0	Doc.Code 005	Language ML	Sheet 1/1
Size A 2	TRI 510	Function Code / CAD System Pro/E / Prod.Type 0 0 X	Replacement for		

100mm

Toute Communication ou reproduction de ce document, toute exploitation ou communication de son contenu sont interdites, sauf autorisation expresse. Tout manquement à cette règle constitue un abus évident et expose son auteur au versement de dommages et intérêts. Tous droits de propriété industrielle réservés, notamment en matière de brevets et de modèles.

Weitergabe sowie nicht ausdrücklich zugestandenen Zwecken sowie Mitteilung ihres Inhalts nicht gestattet, soweit Alle Rechte für den Fall der Patenterteilung oder Gebrauchsmustereintragung vorbehalten. verpflichten zu Schadensersatz.

Non è permesso consegnare a terzi o riprodurre questo documento, né utilizzarne il contenuto o renderlo comunque noto a terzi senza autorizzazione esplicita. Ogni infrazione costituirà un evidente abuso e comporterà il risarcimento dei danni subiti.
E' vietata l'opera di terzi, salvo diversi accordi presi per iscritto, la copia, la diffusione o l'uso del presente documento o del suo contenuto per scopi di brevetti o modelli. Copyright, Dissemination of this document and giving to others and the use or communication of the contents thereof, are forbidden without express authority. Offenders are liable to the payment of damages. All rights are reserved in the event of the grant of patent or registration of a utility model or design. This document is the subject of copyright.

dwg: 9510021330_____005 / Version A.2 / state: in Work / mdl: 9510021330_____A01