No.	MATERIAL	SURFACE PROTECTION	COMPONENT NAME
I	JED-475-2	JED-256-5	GUIDE, FUEHRUNG, GUIDE, GUIDA
II	JED-7080M	-	SEALING, DICHTEN, ETANCHEITE, IMPERMEABILIT
III	JED-029M1	JED-259	BODY, GEHAEUSE, CORPO, CORPS USINE
IV	JED-365-1 (PP)	-	COVER, DECKEL, COUVERCLE, COPERCHIO
V	EN 10277-3 (8)	JED-257	NUT, MUTTER, ECROU, DADO
VI	JED-475-2	JED-257	WASHER, SCHEIBE, RONDELLE, ROSETTA
VII	JED-051M4	JED-256-4	SCREW, SCHRAUBE, VIS, VITE [M4; class 10.9]
VIII	JED-051M1	JED-256-4	SCREW, SCHRAUBE, VIS, VITE [M6; class 4.8]

<1> SAFETY CHARACTERISTICS	0
<2> SIGNIFICANT CHARACTERISTICS	0
<CI> CUSTOMER INTERFACE	0

D

USAGE VERWENDUNG UTILISATION APPLICAZIONE	SUPPLY LINE VERSORGUNG ALIMENTATION ALIMENTAZIONE	
SYMBOL SYMBOL ISO 1219 SYMBOLE SIMBOLO	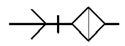	
WORKING POSITION EINBAULAGE POSITION DE FONCTIONNEMENT POSIZIONE DE FUNZIONAMENTO	UNIMPORTANT BELIEBIG INDIFFERENTE INDIFFERENTE	
WORKING MEDIUM ARBEITSMEDIUM FLUIDE D'UTILISATION FLUIDO DI ESERCIZIO	COMPRESSED AIR DRUCKLUFT AIR COMPRIME ARIA COMPRESSA	
NORM NORM NORME NORMA	ISO 1728	
AMBIENT MEDIUM UMGEBUNGSMEDIUM FLUIDE AMBIANT FLUIDO AMBIENTE	AIR (CONTAINING WATER, DUST AND OIL) LUFT (WASSER-, STAUB- UND OELHALTIG) AIR (HUMIDE, HUILEUX POUSSIEREUX) ARIA (ACQUA, POLVERE ED OLIO INQUINATO)	
WORKING TEMPERATURE THERMISCHER ARBEITSBEREICH TEMPERETURE DE FONCTIONNEMENT TEMPERATURA DI UTILIZZAZIONE	-40°...+80°C	
MAX INLET PRESSURE MAX BETRIEDSDRUCK PRESSION D'ALIMENTATION MAXI TEMPERATURA DI UTILIZZAZIONE	8.5 bar	
TORQUE ANZUGSMOMENT COUPLE DE SERRAGE COPPIA DI SERRAGGIO	**	***
	$1.5^{+0.5}_{0}$ Nm	4^{+1}_{0} Nm

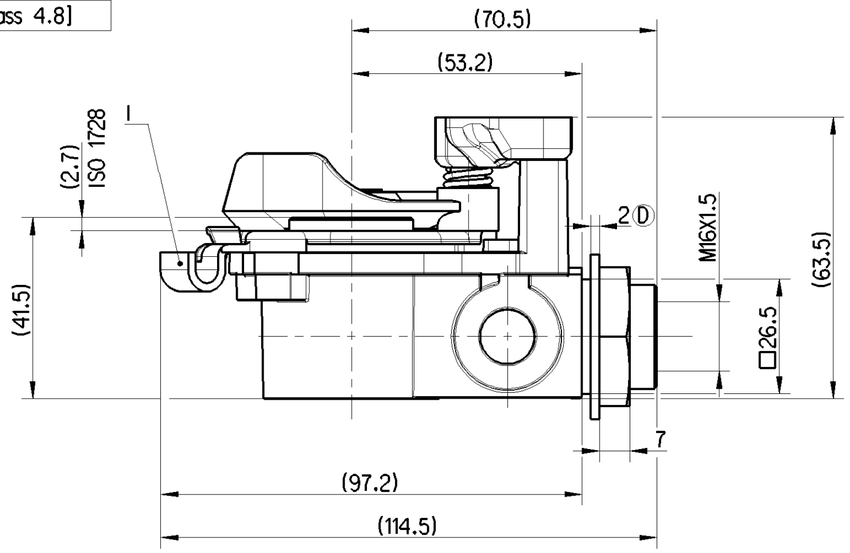

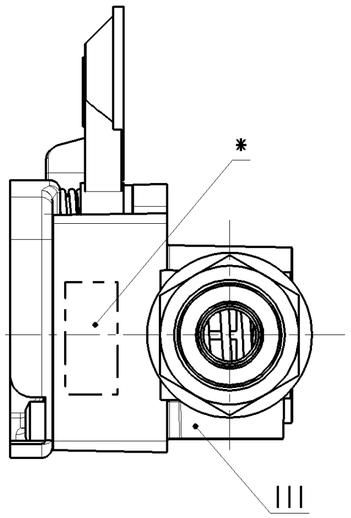

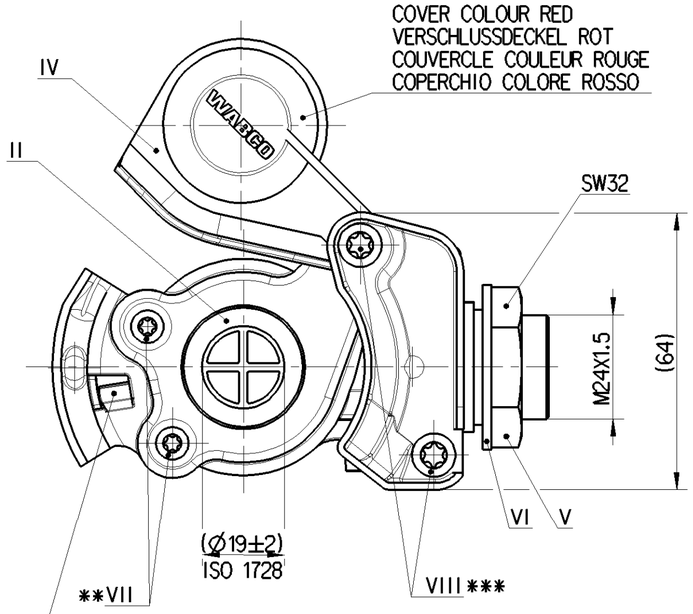

SAFEGUARD AGAINST CROSS-COUPLING
VERTAUSCHSICHERUNG
SECURITEEN CAS DE DEFAUT DE CONNEXION
PROTEZIONE CONTRO CONNESSIONE INCORRETTA

* WABCO DEVICE NUMBER, DATE OF MANUFACTURE
WABCO-GERATE NUMMER, HERSTELLDATUM
NUMERO DE L'APPAREIL WABCO, DATE DE FABRICATION
NUMERO DELL'APPARECCHIO WABCO, DATA DI FABBRICAZONE

SW32 TIGHTENING TORQUE:
SW32 ANZUGSMOMENT: 45±5Nm
SW32 COUPLE DE SERRAGE:
SW32 COPPIA DI SERRAGGIO:

TIGHTENING TORQUE FOR THREAD M16x1,5:
ANZUGSMOMENT FUER GEWINDE M16x1,5: 30±2Nm
COUPLE DE SERRAGE POUR FIL M16x1,5:
COPPIA DI SERRAGGIO PER FILETTA M16x1,5:

General Specification: JED-334-1 , Size ISO 14405 LP					
Further Technical Data: 952 201 000 0					
Doc. Code: 035		Sheet:	To		
General Tolerances JED-261					
		Range of Nominal Dimensions (± mm)			
Class 1)		≤ 50	> 50 ≤ 180	> 180 ≤ 400	> 400
Fine		0.5	1.0	1.5	2.0
Medium	X	1.0	2.0	3.0	4.0
Coarse		2.0	3.5	5.0	6.5
Tapped Holes acc. JED-152					
1) Tolerance Class Applied Crossmarked					

Copyright WABCO®

Date	Signature
Drawn 2020-05-14	Stasiak
Checked 2020-05-15	Piskadlo
Expert Piskadlo	

WABCO

HOSE COUPLING WITH INTEGRATED FILTER
KUPPLUNGSKOPF MIT INTEGRIERTEM FILTER
TETE D'ACCOUPLEMENT AVEC FILTRE
TESTA D'ACCOPIAMENTO CON FILTRO

Mass	Scale	Material No.	Date of first issue: 2006-09-21		
0.314 KG	1:1	952 201 012 0	Doc.Code 005	Language ML	Sheet 1/1
Size A 2	CAD System CREO	ECN-No. 504222	Revision 2x D	Techn. Resp. 5712	Replacement for -

100mm

Non è permesso consegnare a terzi questo documento, né utilizzarne il contenuto o renderlo comunque noto a terzi senza autorizzazione scritta. Ogni utilizzo costituirà un evidente abuso e comporterà il risarcimento dei danni subiti.
È fatto riserva di tutti i diritti derivanti da brevetti o modelli.

Copying of this document and giving it to others and the use or communication of the contents thereof, are forbidden without express authority. Contravention of this restriction will constitute an evident abuse and result in a liability to the payment of damages. All rights are reserved in the event of the grant of patent or registration of a utility model or design. This document is the subject of copyright.

Toute Communication ou reproduction de ce document, toute exploitation ou communication de son contenu sont interdites, sauf autorisation expresse. Tout manquement à cette règle constituerait un abus évident et expose son auteur au versement de dommages et intérêts. Tous droits de propriété industrielle réservés, notamment en matière de brevets et de modèles.

Weitergabe sowie Verwertung dieser Unterlage, Verwertung und Mitteilung ihres Inhalts nicht gestattet, soweit nicht ausdrücklich zugesprochen. Zuwiderhandlungen stellen einen offensichtlichen Missbrauch dar und verpflichten zu Schadensersatz. Alle Rechte für den Fall der Patenterteilung oder Gebrauchsmuster-Eintragung vorbehalten.