MATERIAL AND SURFACE PROTECTION OF ELEMENT			
I	JED-016M1	JED-240	BODY,GEHAEUSE,CORPO,CORPS USINE
II	POM	-	COVER,DECKEL,COUVERCLE,COPERCHIO
III	8.8	JED-257	SCREW,SCHRAUBE,VIS,VITE

SYMBOL SYMBOL SYMBOLE SIMBOLO	
WORKING POSITION EINBAULAGE POSITION DE FONCTIONNEMENT POSIZIONE DE FUNZIONAMENTO	UNIMPORTANT BELIEBIG INDIFFERENTE INDIFFERENTE
WORKING MEDIUM ARBEITSMEDIUM FLUIDE D'UTILISATION FLUIDO DI ESERCIZIO	COMPRESSED AIR DRUCKLUFT AIR COMPRIME ARIA COMPRESSA
AMBIENT MEDIUM UMGEBUNGSMEDIUM FLUIDE AMBIANT FLUIDO AMBIENTE	AIR (CONTAINING WATER DUST AND OIL) LUFT (WASSER-, STAUB- UND OELHALTIG) AIR (HUMIDE, HUILEUX POUSSIEREUX) ARIA (ACQUA, POLVERE ED OLIO INQUINATO)
WORKING TEMPERATURE THERMISCHER ARBEITSBEREICH TEMPERETURE DE FONCTIONNEMENT TEMPERATURA DI UTILIZZAZIONE	-40°+80°C
MAX INLET PRESSURE MAX BETRIEDSDRUCK PRESSION D'ALIMENTATION MAXI PRESSIONE MASSIMA D'ALIMENTAZIONE	10 BAR

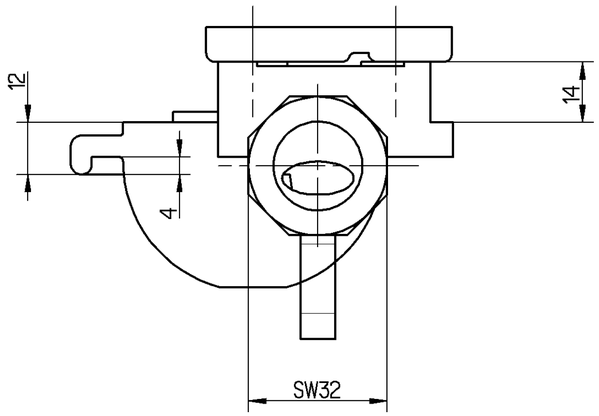

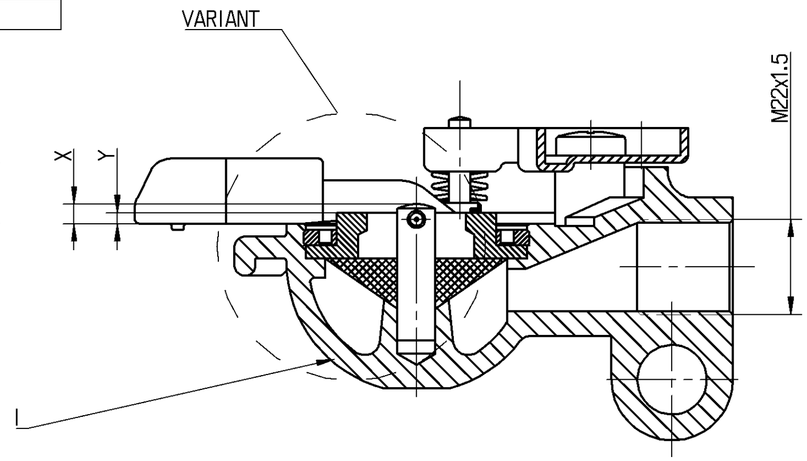

VARIANT B

ONLY FOR 452 203 032 0

NUR FUR 452 203 032 0

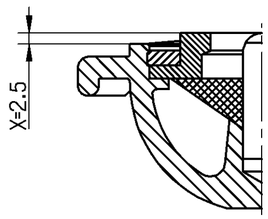

VARIANT A

ONLY FOR 452 203 031 0

NUR FUR 452 203 031 0

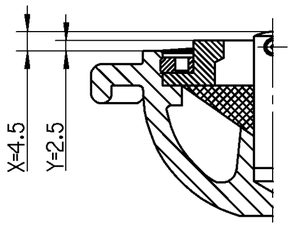

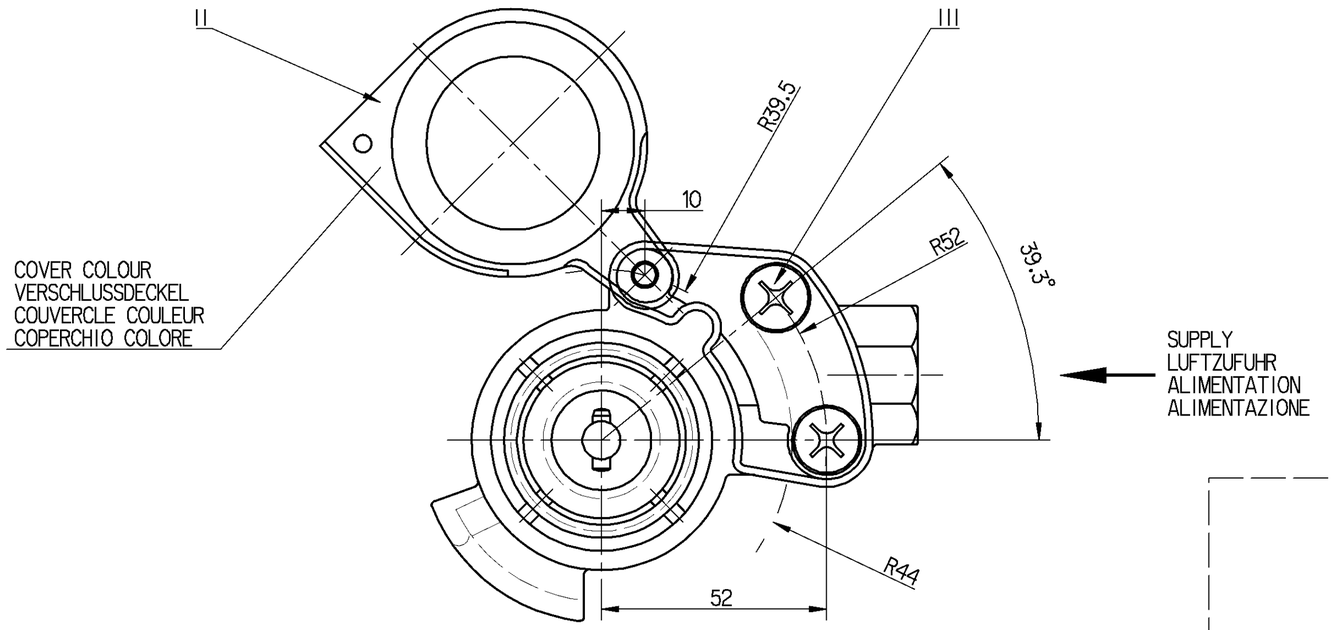

Z,Y: TORQUE
Z,Y: ANZUGSMOMENT
Z,Y: COUPLE DE SERRAGE 30±2 Nm
Z,Y: COPPIA DI SERRAGGIO

452 203 032 0	B	CONTROL LINE BREMSLEITUNG / STEUERLEITUNG CONDUITE DE COMMANDE -	YELLOW GELB JAUNE GIALLO	2.5	0
452 203 031 0	A	SUPPLY LINE VORRATSLEITUNG / SPEISELEITUNG CONDUITE D'ALIMENTATION CONDOTTO DI SERVIZIO	RED ROT ROUGE ROSSO	4.5	2.5
IDENTIFICATION BENENNUNG DENOMINATION DENOMINAZIONE	VARIANT ABWANDLUNG VARIANTE VARIANTE	APPLICATION EINSATZ UTILISATION UTILIZZAZIONE	COLOUR FARBE COULEUR COLORE	X	Y

GENERAL SPECIFICATION: JED-334-0					
FURTHER TECHNICAL DATA:					
DOC. CODE:		SHEET:	TO		
GENERAL TOLERANCES					
	RANGE OF NOMINAL DIMENSIONS (± mm)				
CLASS 1)	≤ 50	> 50 ≤ 180	> 180 ≤ 400	> 400	
FINE	0.5	1.0	1.5	2.0	
MEDIUM x	1.0	2.0	3.0	4.0	±3°
COARSE	2.0	3.5	5.0	6.5	
TAPPED HOLES ACC. ISO 4039 / JED-152					
1) TOLERANCE CLASS APPLIED CROSSMARKED					

DCN-NO.	REV.	DATE

Pro/ENGINEER DRAWING COPYRIGHT	
DATE	SIGNATURE
DRAWN	
05-09-02	LASKA
CHECKED	
05-09-02	GRZYBOWSKI
EXPERT CODE	
804	

WABCO

HOSE COUPLING
KUPPLUNGSKOPF
TETE D'ACCOUPLEMENT
TESTA D'ACCOPIAMENTO

MASS	SCALE	PRODUCT IDENTIFICATION NO.	DOC. CODE	SHEET
0.2 KG	1:1	952 897 012 0	653	1/1
SIZE	TRI			
A 2	037			

FUNCTION CODE	SHAPE CODE	PRODUCT TYPE	REPLACEMENT FOR
		X	

Dwg.: 9528970120 653

MOD. NAME

TOUTE COMMUNICATION OU REPRODUCTION DE CE DOCUMENT, TOUTE EXPLOITATION OU COMMUNICATION DE SON CONTENU, NE SONT PAS AUTORISES SAUF ACCORD ECRIT. TOUTES VIOLATIONS SONT SUSCEPTIBLES D'ENTRAINER UN ABUS INDUSTRIELLE RESERVES. NOTAMMENT EN MATIERE DE BREVETS ET DE MODELES.

NON E PERMESSO CONSEGNARE A TERZI O RIPRODURE QUESTO DOCUMENTO, NE UTILIZZARNE IL CONTENUTO O RENDERNE ESPLICITA, PER LA TESI, SENZA AUTORIZZAZIONE SCRITTA. OGNI VIOLAZIONE COSTituisce un abuso e comporta il risarcimento dei danni subiti. E' riservata ogni tutela in materia di brevetti o modelli.

TOUTE COMMUNICATION OU REPRODUCTION DE CE DOCUMENT, TOUTE EXPLOITATION OU COMMUNICATION DE SON CONTENU, NE SONT PAS AUTORISES SAUF ACCORD ECRIT. TOUTES VIOLATIONS SONT SUSCEPTIBLES D'ENTRAINER UN ABUS INDUSTRIELLE RESERVES. NOTAMMENT EN MATIERE DE BREVETS ET DE MODELES.

COPYING OF THIS DOCUMENT AND GIVING IT TO OTHERS AND THE USE OR COMMUNICATION OF THE CONTENTS THEREOF, ARE NOT PERMITTED WITHOUT EXPRESS AUTHORITY. OFFENDERS ARE LIABLE TO PAY COMPENSATION. ALL RIGHTS ARE RESERVED IN THE EVENT OF THE GRANT OF PATENT OR REGISTRATION OF A UTILITY MODEL OR DESIGN.

BEITERGABE SOWIE VERVIELFALTIGUNG DIESER UNTERLAGE, VERWERTUNG UND MITTEILUNG IHRES INHALTS NICHT GESTATTET WENN NICHT AUSDRUCKLICH ZugESTANDEN. ZUWIDERHANDLungen verpflichten zu Schadenersatz. Alle Rechte für den Fall der Patenterteilung oder Gebrauchsmuster-Eintragung vorbehalten.