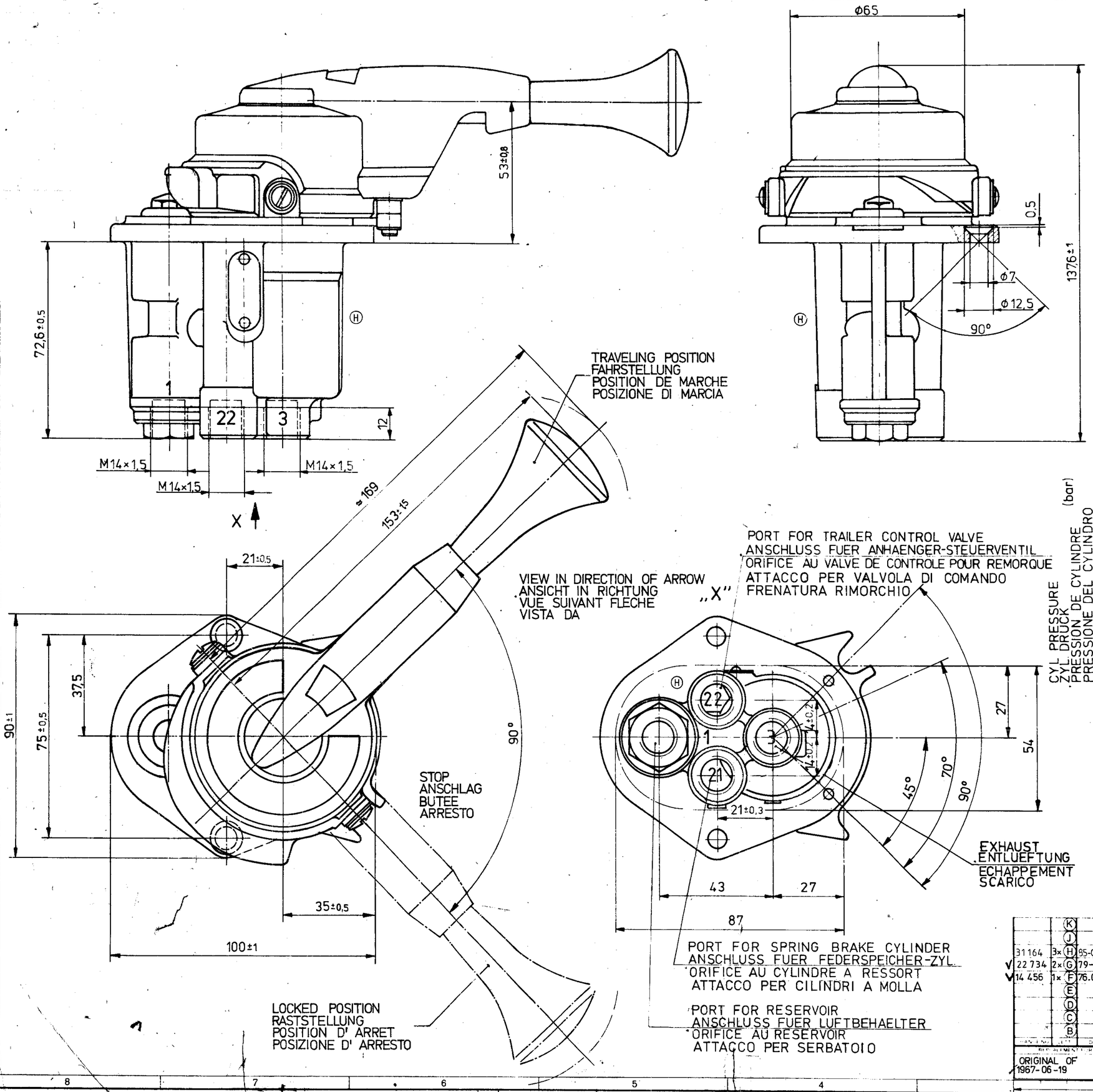

WORKING PRESSURE:
BETRIEBSDRUCK:
PRESSION DE SERVICE:
PRESSIONE D' ESERCIZIO: MAX. 8 bar

THERMAL RANGE OF APPLICATION:
THERMISCHER ANWENDUNGSBEREICH:
APPLICATION THERMIQUE:
CAMPO DI APPLICAZIONE TERMICA:
-40 ... +80°C

MEDIUM: AIR
MEDIUM: LUFT
FLUIDE: AIR
FLUIDO: ARIA

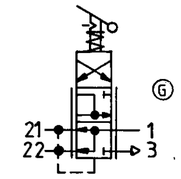

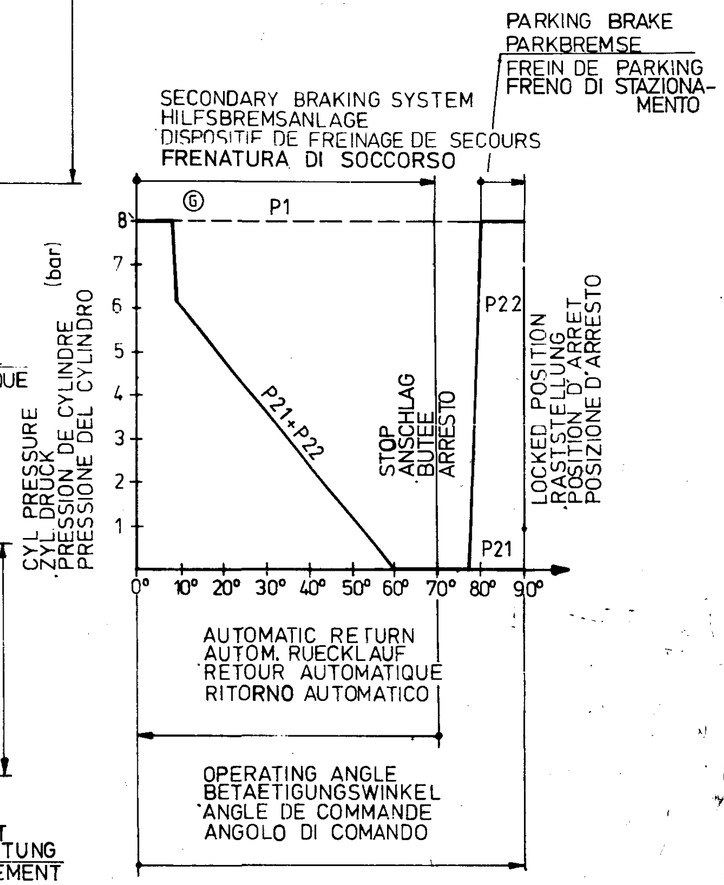

		K		
		J		
31 164	3×	H	95-08-01	
√ 22 734	2×	G	79-08-28	
√ 14 456	1×	F	76.02.06	
		E		
		D		
		C		
		B		
CHANGE NO.			DATE	

DATE	SIGNATURE	
DRAWN 76-02-05	Frapp	WABCO WESTINGHOUSE
CHECKED 76-02-05		HAND OPERATED BRAKE VALVE ROBINET DE COMMANDE A MAIN RUBINETTO DI COMANDO A MANO HANDBREMSVENTIL, ENTLUEFTEND
STANDARDIZATION 76-02-06		
MASS	SCALE 1:1	IDENTIFICATION CODE 961 702 001 0
SIZE A 2	TRL 140	F / I 1/730 452 — SHEET 1/1
CODE FOR FUNCTION	CODE FOR SHAPE	CODE FOR DOCUMENT 605
ORIGINAL OF 1967-06-19 (E)		

100 mm

Tous droits de propriété industrielle réservés. Riservati tutti i diritti in caso di concessione di brevetti o di registrazione di un modello di utilità.
All rights are reserved in the event of the grant of a patent or the registration of a utility model or design. Alle Rechte für den Fall der Patenterteilung oder Gebrauchsmuster-Eintragung vorbehalten.