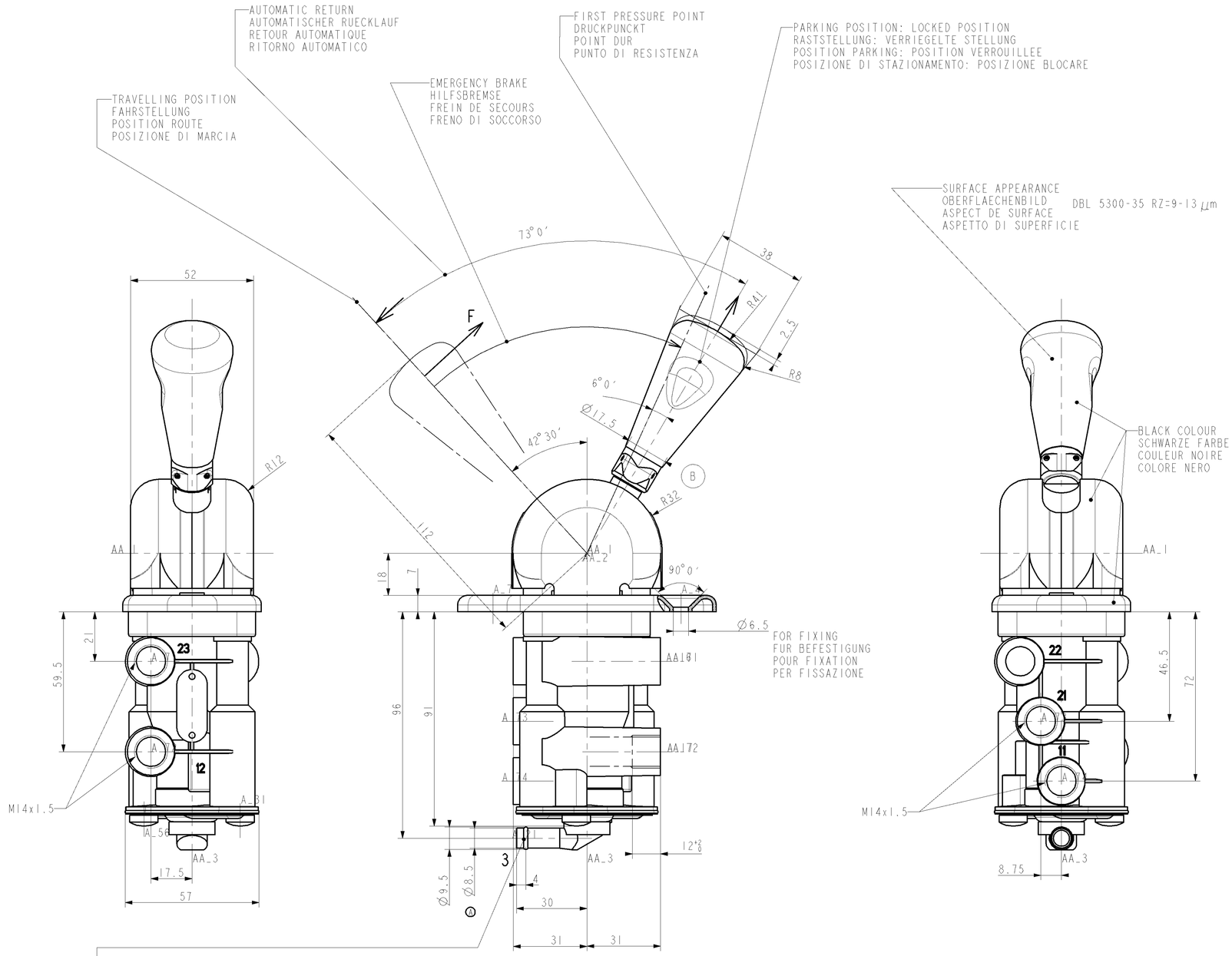

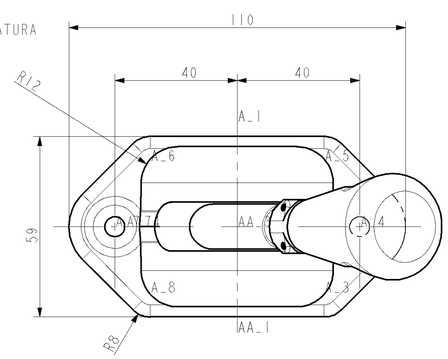

WORKING TEMPERATURE	-40+80°C THE VALVE IS TIGHT IN ALL POSITIONS OF LEVER UP TO -20°C BELOW SOME LEAKAGES ARE POSSIBLE WITHOUT DISTURBING HIS OPERATION
THERMISCHER ANWENDUNGSBEREICH	-40 +80°C DAS VENTIL IST DICHT IN ALLEN STELLUNGEN DES HEBELS BIS -20°C DARUNTER KANN ES LECKVERLUST GEBEN (OHNE NACHTEIL FUR DIE TATIGKEIT DES GERATES)
TEMPERATURE DE FONCTIONNEMENT	-40+80°C LE ROBINET EST ETANCHE POUR TOUTE POSITION DU LEVIER JUSQU'A -20°C. EN DESSOUS IL PEUT PRESENTER DES FUITES NON PREJUDICIABLES A SON FONCTIONNEMENT
TEMPERATURA DI ESERCIZIO	-40+80°C IL RUBINETTO E A TENUTA PER TUTTE LE POSIZIONI DELLA LEVA FINO A UNA TEMPERATURA DI -20°C A TEMPERATURA INFERIORI SONO AMMESSE PERDITE SENZA INCONVENIENTI FUNZIONAMENTO

MEDIUM	AIR
MEDIUM	DRUCKLUFT
FLUIDE	AIR
FLUIDO	ARIA

P1 INLET PRESSURE
EINGESTEUERTER DRUCK
PRESSION D'ALIMENTATION
PRESSIONE DI ALIMENTATION
P1 10 bar MAX

F FORCE AT LEVER AFTER
KRAFT AM HEBEL NACH
FORCE SUR LEVIER APRES
FORZA SULLA LEVA DOPO
10 ACTIONS
WIRKUNGEN
ACTIONS
AZIONE

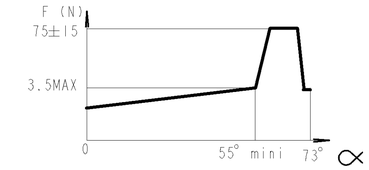

11 SUPPLY
VORRAT
ALIMENTATION
ALIMENTAZIONE

12 EMERGENCY RELEASE VALVE:SUPPLY
NOTLOSEVENTIL:VORRAT
VALVE DE SECURITE:ALIMENTATION
VALVOLA DI SICUREZZA:ALIMENTAZIONE

21 SPRING BRAKE
FEDERSPREICHERZYLINDER
FREIN A RESSORT
CILINDRO A MOLLA

23 EMERGENCY RELEASE VALVE:SPRING BRAKE
NOTLOSEVENTIL:FEDERSPEICHERZYLINDER
VALVE DE SECURITE:FREIN A RESSORT
VALVOLA DI SICUREZZA:CILINDRO A MOLLA

3 EXHAUST
ENTFLUTUNG
ECHAPPEMENT
SCARICO

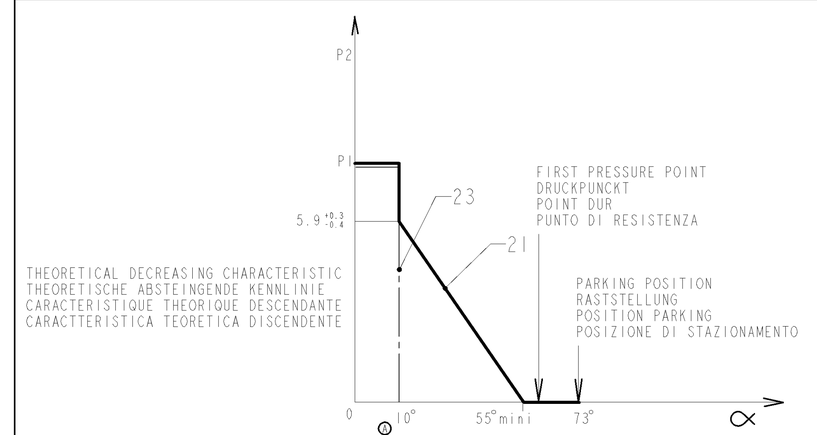

THEORETICAL DECREASING CHARACTERISTIC
THEORETISCHE ABSTEINGENDE KENNLINIE
CARACTERISTIQUE THEORIQUE DESCENDANTE
CARACTTERISTICA TEORETICA DISCENDENTE

FURTHER TECHNICAL DATA SEE						
IDENTIFICATION NO. :						
CODE FOR DOCUMENT: 605	SHEET: TO					
GENERAL TOLERANCES						
CLASS	RANGE OF NOMINAL DIMENSIONS (± mm)					
	1)	Ø1775	>50 Ø177	>180 Ø1774	>400	
I		0,5	1,0	1,5	2,0	
II		1,0	2,0	3,0	4,0	± 3°
III		2,0	3,5	5,0	6,5	
TAPPED HOLES ACC. ISO 4039 / JED-152						
1) TOLERANCE CLASS APPLIED CROSSMARKED						

DCN-NO.	REV.	DATE
97465	1x B	23-09-97
97305	2x A	03-04-97

L K J H G F E D C

COPYRIGHT
DATE SIGNATURE
06-11-96 DRAWN ROLLAND
06-11-96 CHECKED HAIMART
06-11-96 STANDARDIZATION 96237

WABCO

MVR BRAKE VALVE
MVR BREMSVENTIL
ROBINET MVR
RUBINETTO MVR

MASS	SCALE	PRODUCT IDENTIFICATION NO.	CODE FOR DOCUMENT	SHEET
- kg	1/1	961 722 326 0	605	1/1
SIZE	T.R.I.	CODE F.PROD.-GROUP / CODE FOR SHAPE	REPLACEMENT FOR	
A1	210		884 612 114 0	

100mm

EXPERT CODE TYPE OF PRODUCT

TOUTE COMMUNICATION OU REPRODUCTION DE CE DOCUMENT, TOUTE EXPLOITATION OU COMMUNICATION DE SON CONTENU SONT INTERDITES SAUF AUTORISATION ECRITE. TOUS DROITS RESERVES EN CAS DE DELIVRANCE D'UN BREVET, D'ENREGISTREMENT DE MODELE D'UTILITE OU DE DESSIN OU MODELE.
WEITERGABE SOWIE VERVIELFAELTIGUNG DIESER UNTERLAGE, VERWERTUNG UND MITTEILUNG IHRES INHALTS SIND NICHT GESTATTET SOWEIT KEINE AUSDRUECKLICHE ZUSTIMMUNG VORliegt. ALLE RECHTE FUER DEN FALL DER PATENTERTEILUNG ODER EINTRAGUNG EINES GebrauchsMUSTERS - EINTRAGUNG VORbehalten.
NON E PERMESSO CONCEDERE - FARE O RIPRODURRE QUESTO DOCUMENTO, NE UTILIZZARE I CONTENUTO O RENDERLO COMUNICARE AUTORIZZAZIONE ESPRESSA. NON APPARTENENTE IN CASO DI RILASCIO DI BREVETTO O MODELLO DI UTILITA' O DISEGNO O MODELLO.
DOCUMENT AND GIVING IT TO OTHERS AND THE USE OR COMMUNICATION OF THE CONTENTS THEREOF, ARE FORBIDDEN WITHOUT EXPRESS AUTHORITY. CONTRAVENTION OF THIS RESTRICTION WILL RENDER THE PERPETRATOR LIABLE TO PAYMENT OF DAMAGES. ALL RIGHTS ARE RESERVED IN THE EVENT OF THE GRANT OF A PATENT OR THE REGISTRATION OF AN UTILITY MODEL OR DESIGN.
COPYING OF THIS DRAWING IS SUBJECT TO COPYRIGHT