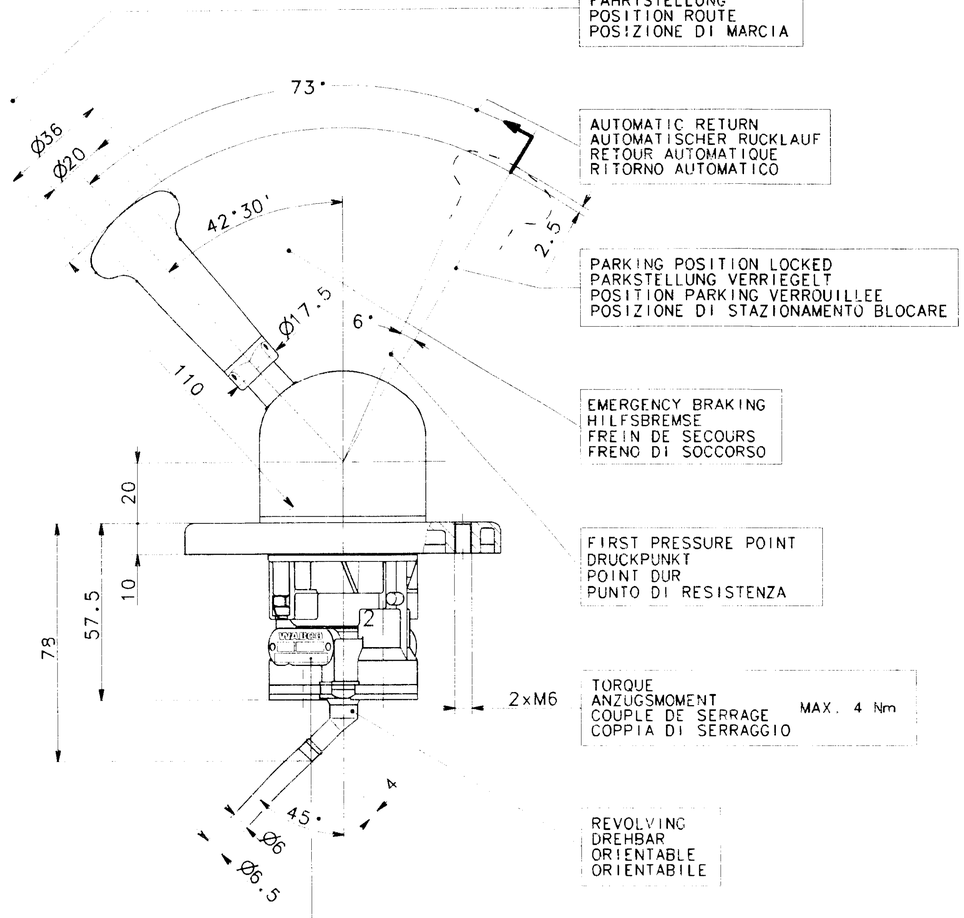

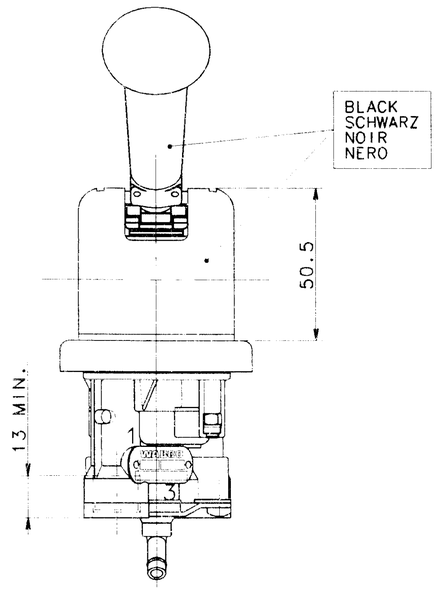

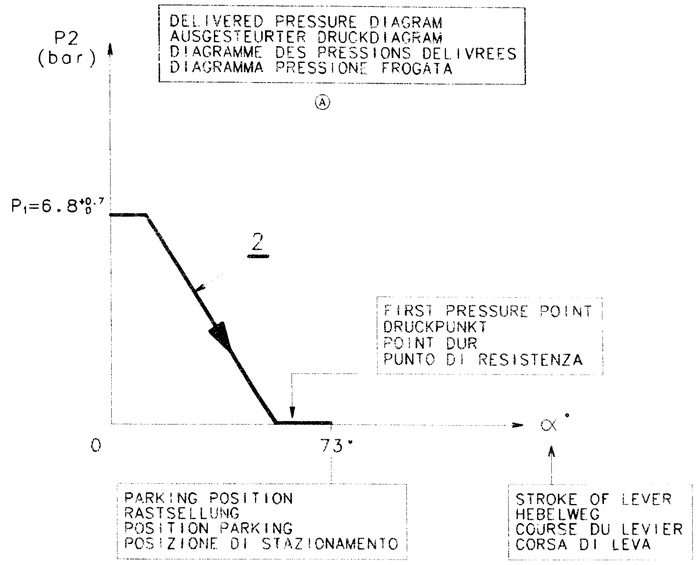

MARKING OF PORTS
KENNZEICHNUNG DER ANSCHLUESSE
MARQUAGE DES ORIFICES
MARCATURA DEGLI ORIFIZI

1	SUPPLY VORRAT ALIMENTATION ALIMENTAZIONE
2	SPRING BRAKE CYLINDER FEDERSPEICHERZYLINDER CYLINDRE A RESSORT CILINDRO A MOLLA
3	EXHAUST ENTLUEFTUNG ECHAPPEMENT SCARICO

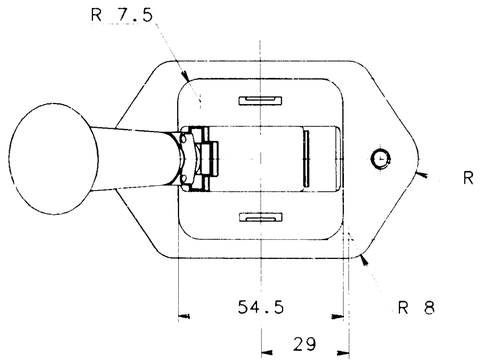

TORQUE
ANZUGSMOMENT
COUPLE DE SERRAGE
COPPIA DI SERRAGGIO
MAX. 34 Nm

2xM16x1.5
JED 464

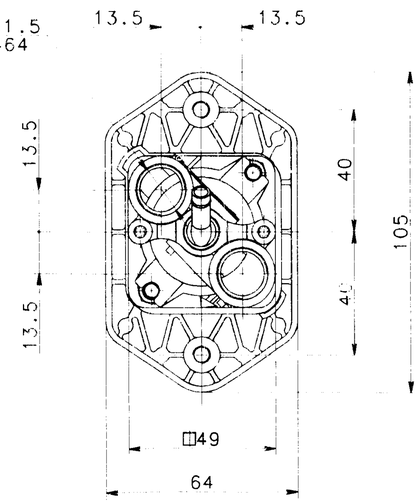

VIEW
ANSICHT
VUE
VISTA
F

TESTING SHEME
SYMBOL
SCHEMA DE PRINCIPE
SCHEMA DI PRINCIPIO

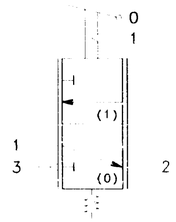

GENERAL DATA
ALLGEMEINE DATEN
CARACTERISTIQUES GENERALES
CARATTERISTICHE GENERALI

MEDIUM : AIR
MEDIUM : LUFT
FLUIDE : AIR
FLUIDO : ARIA

THERMICAL RANGE
THERM ANWENDUNGSBEREICH
TEMPERATURE D'UTILISATION
TEMPERATURA DI UTILIZZAZIONE
-40° C.....+80° C

P1 = 10 bar MAX.

$P_2 = 6.8^{+0.7}_{0}$ bar FOR FUER POUR PER P_1 = 10 bar

Ⓐ

FURTHER TECHNICAL DATA SEE					
IDENTIFICATION NO.:					
CODE FOR DOCUMENT: 605		SHEET:		TO	
GENERAL TOLERANCES					
CLASS	RANGE OF NOMINAL DIMENSIONS (± mm)				
	1)	≤50	> 50 ≤180	>180 ≤400	>400
I		0.5	1.0	1.5	2.0
II		1.0	2.0	3.0	4.0
III		2.0	3.5	5.0	6.5
TAPPED HOLES ACC. ISO 4030 / JED-152					
1) TOLERANCE CLASS APPLIED CROSSMARKED					

L K J H G F E D C B

DCN-NO.	REV.	DATE
93 138	2x Ⓐ	93-06-23

COPYRIGHT

DATE	SIGNATURE
DRAWN 91-04-10	ROLLAND
CHECKED 91-04-11	BION
STANDARDIZATION 91040	

WABCO

HAND BRAKE VALVE
HANDBREMSVENTIL
ROBINET DE FREINAGE A MAIN
RUBINETTO DI COMMANDO A MANO

MASS	SCALE	PRODUCT IDENTIFICATION NO.	CODE FOR DOCUMENT	SHEET
0.50 kg	1:1	961 723 021 0	605	1 1
SIZE A 1	T.R.I. 210	CODE F.PROD.-GROUP 521	CODE FOR SHAPE	REPLACEMENT FOR

100mm

EXPERT CODE ☐☐☐ TYPE OF PRODUCT ☐☐☒