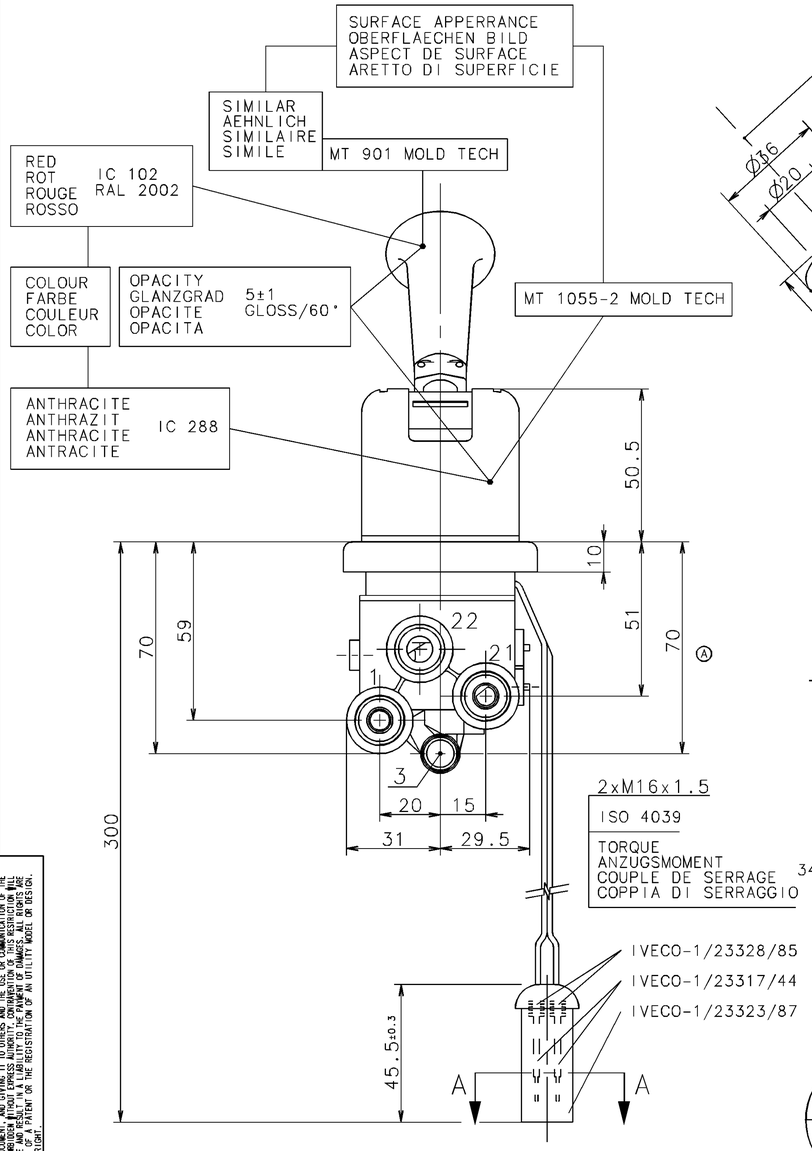

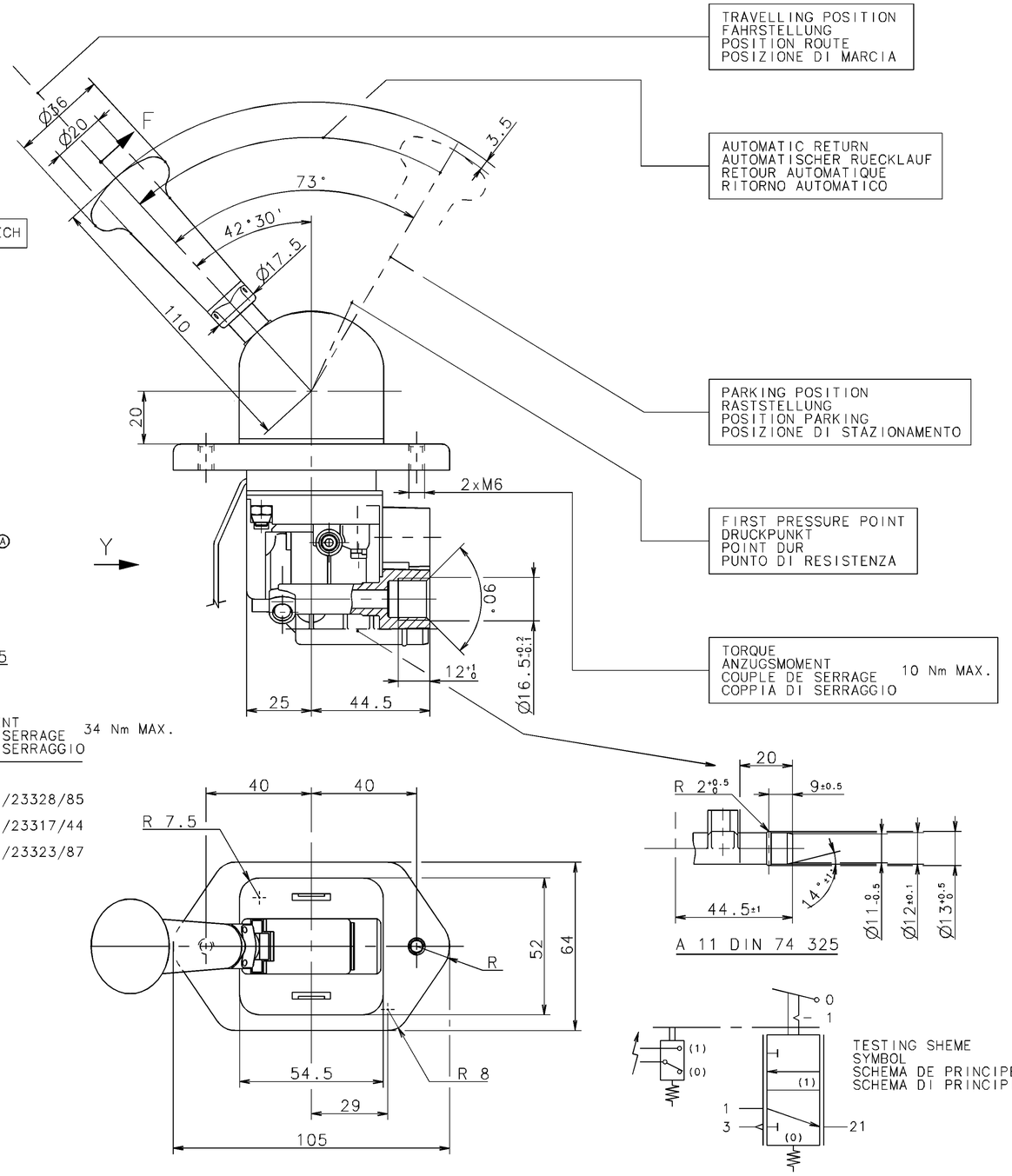

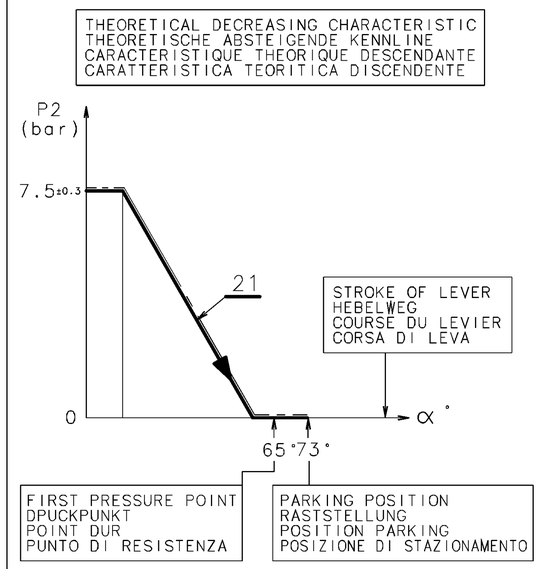

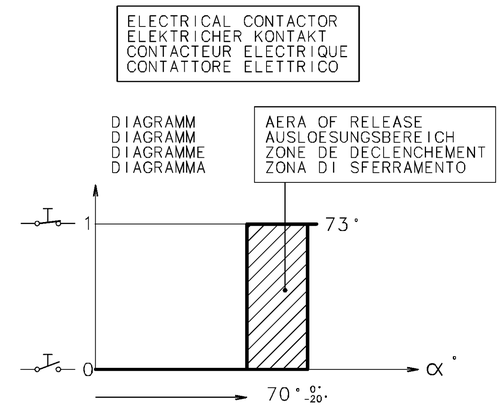

CHARACTERISTIC
KENNLINIE
CARACTERISTIQUE
CARATTERISTICA

V. MAX. = 24V
I. MAX. = 0.5A

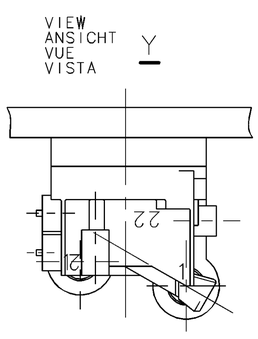

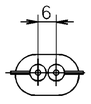

1	SUPPLY VORRAT ALIMENTATION ALIMENTAZIONE	MEDIUM : AIR MEDIUM : LUFT FLUIDE : AIR FLUIDO : ARIA
21	SPRING BRAKE CYLINDER FEDERSPEICHERZYLINDER CYLINDRE A RESSORT CILINDRO A MOLLA	THERMICAL RANGE THERMISCHER ANWENDUNGSBEREICH TEMPERATURE D'UTILISATION TEMPERATURA DI UTILIZZAZIONE -40°....+80°C
3	EXHAUST ENTLUEFTUNG ECHAPPEMENT SCARICO	P_1 = 11 bar MAX.

FURTHER TECHNICAL DATA SEE
IDENTIFICATION NO.:
CODE FOR DOCUMENT: 605 SHEET: TO

GENERAL TOLERANCES

CLASS	RANGE OF NOMINAL DIMENSIONS (± mm) 1)	≤50	> 50 ≤180	>180 ≤400	>400	∡
I		0,5	1,0	1,5	2,0	
II		1,0	2,0	3,0	4,0	± 3°
III		2,0	3,5	5,0	6,5	

TAPPED HOLES ACC. ISO 4039 / JED-152
1) TOLERANCE CLASS APPLIED CROSSMARKED

DCN-NO.	REV.	DATE
95031	1x Ⓐ	95-02-07

L
K
J
H
G
F
E
D
C
B

COPYRIGHT

DATE	SIGNATURE
DRAWN 92-06-24	GESTIN
CHECKED 92-06-24	BION
STANDARDIZATION 92-06-24	92111

WABCO

HAND BRAKE VALVE
HANDBREMSVENTIL
ROBINET DE FREINAGE A MAIN
ROBINETTO DI COMMANDO A MANO

MASS	SCALE	PRODUCT IDENTIFICATION NO.	CODE FOR DOCUMENT	SHEET
0,83kg	1:1	961 723 023 0	605	1/1
SIZE A 1	T.R.I. 210	CODE F.PROD.-GROUP 521	CODE FOR SHAPE	REPLACEMENT FOR

100mm

EXPERT CODE TYPE OF PRODUCT

86-01