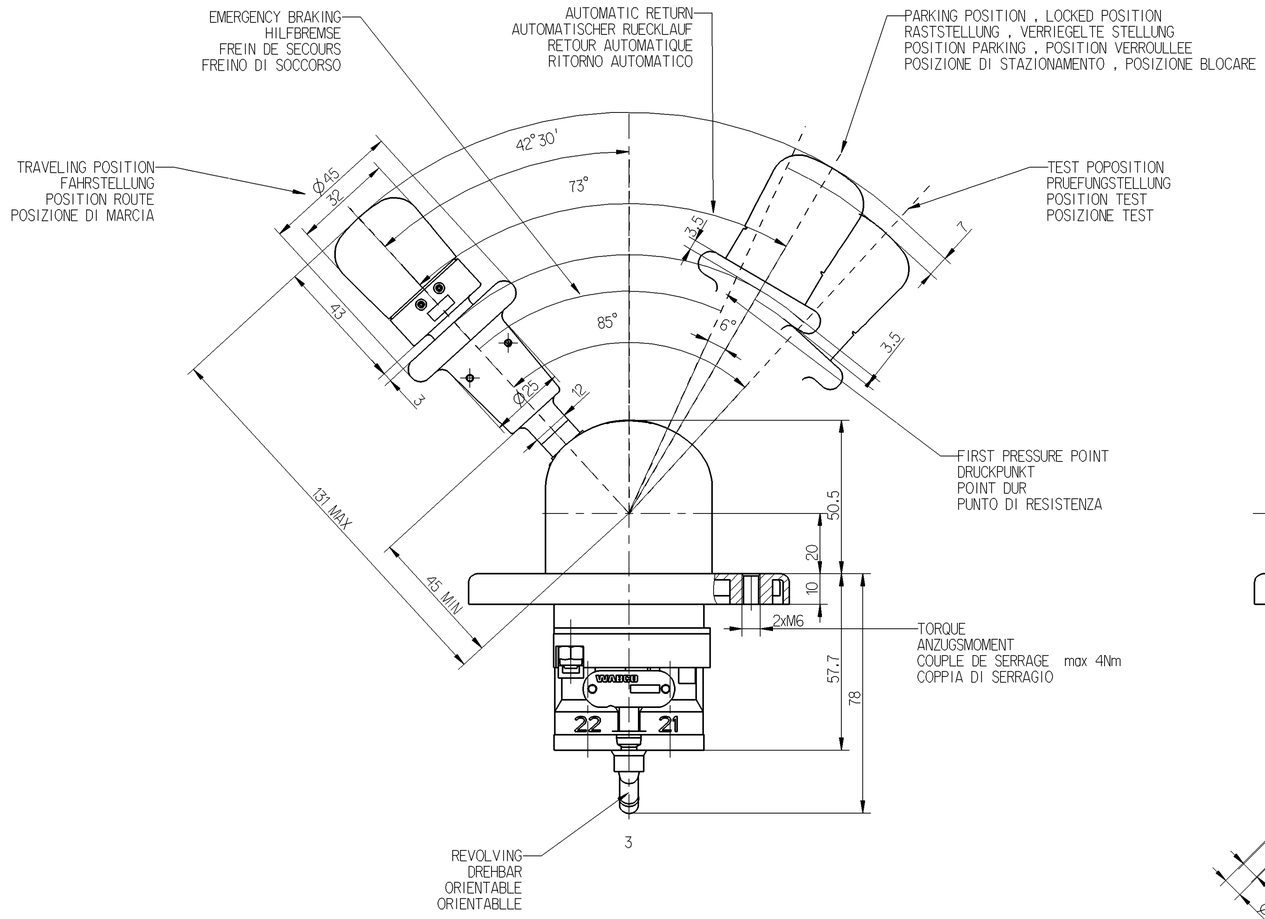

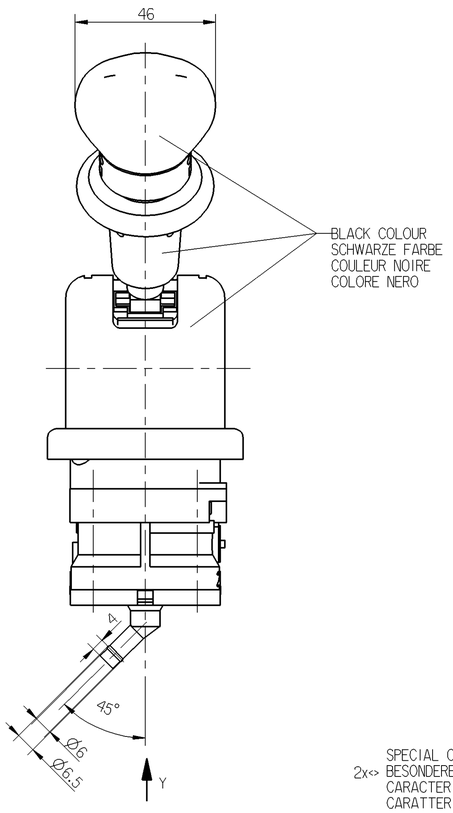

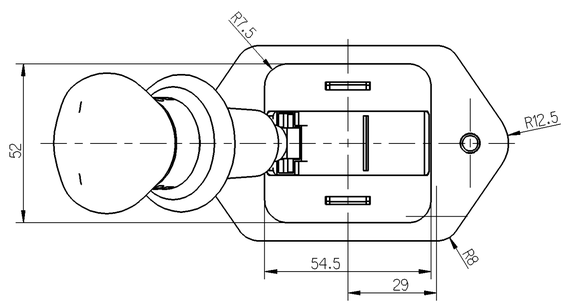

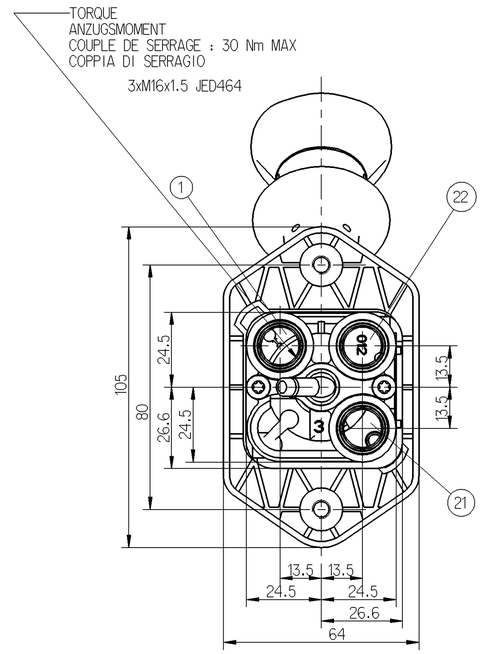

<1> THE LOCKING DEVICE MUST AUTOMATICLY AND SAFETY LOCK THE HANDLE IN THE PARKING POSITION
LA BUTEE DOIT VERROUILLER AUTOMATIQUEMENT ET DE FACON SECURISEE LA POIGNEE EN POSITION PARKING

DELIVERED PRESSURE DIAGRAM
AUSGESTEUERTER DRUCKDIAGRAM
DIAGRAMME DES PRESSION DELIVREES
DIAGRAMMA PRESSIONE FROGATA

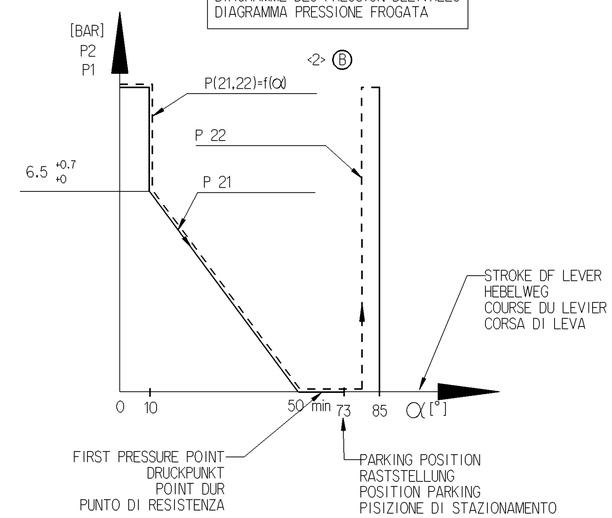

		SYMBOL SINNBILD SYMBOLE SIMBOLO
1	SUPPLY VORRAT ALIMENTATION ALIMENTAZIONE	
21	SPRING BRAKE CYLINDER FEDERSPEICHERZYLINDER CYLINDRE A RESSORT CILINDRO A MOLLA	
22	TRAILER CONTROL VALVE ANHAENGER STEUERVENTIL VALVE DE CONTROLE DEREMORQUE VALVOLA DI CONTROLLO DI RIMORCHIO	
3	EXHAUST ENTLUEFTUNG ECHAPPEMENT SCARICO	

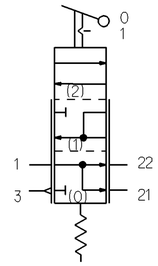

2x<> SPECIAL CHARACTERISTICS B
BESONDERE MERKMALE
CARACTERISTIQUES SPECIALES
CARATTERISTICHE SPECIALI

MEDIUM : AIR
MEDIUM : LUFT
FLUIDE : AIR
FLUIDO : ARIA

THERMICAL RANGE
THERMISCHER ANWENDUNGSBEREICH
TEMPERATURE D'UTILISATTION
TEMPERATURA DI UTILIZZAZIONE -40°...+80°C

P1 = 10 BAR MAX.

115681	3 x B	28.01.2008
110249	A	10.07.2006
DCN-No.	Rev.	Date

State of Revision

General Specification: JED-334-0
Further Technical Data:
Doc. Code: Sheet: To

General Tolerances JED-261

Class 1)	Range of Nominal Dimensions (± mm) ≤ 50	> 50 ≤ 180	> 180 ≤ 400	> 400	∡
Fine		0.5	1.0	1.5	2.0	±3°
Medium		1.0	2.0	3.0	4.0	
Coarse	X	2.0	3.5	5.0	6.5	

Tapped Holes acc. JED-152
1) Tolerance Class Applied Crossmarked

Copyright WABCO ®

Date | Signature
Drawn: 2008-01-10 TOMA
Checked: 2006-07-17 Sutor
Expert: SURMACZ

WABCO

HAND BRAKE VALVE
HANDBREMSVENTIL
ROBINET DE FREINAGE A MAIN
ROBINETTO DI COMANDO A MANO

Mass: 0.640 KG | Scale: 1:1 | Material No.: 961 723 111 0 | WABCO Id. No.: 9617231110
Doc.Code: 005 | Language: ML | Sheet: 1/1
Size: A 1 | TRI: 530 | Function Code | CAD System: Pro/E | Prod.Type | Replacement for
100mm

Toute Communication ou reproduction de ce document, toute exploitation ou communication de son contenu sont interdites, sauf autorisation expresse. Tout manquement à cette règle constitue un délit ouvrant droit à dommages et intérêts. Tous droits réservés.
Weitergabe sowie Vervielfältigung dieser Unterlage, Verwertung und Mitteilung ihres Inhalts nicht gestattet, soweit nicht ausdrücklich zugestanden. Zuwiderhandlungen stellen einen Urheberrechtlichen Tatbestand dar und verpflichten zu Schadensersatz.
Wabcoda ser den Tillåt det Spridandet av detta dokument och utnyttjande av dess innehåll ej utan tillstånd.
Non è permesso consegnare o terzi o riprodurre questo documento, né utilizzarne il contenuto o renderlo comunque noto a terzi senza autorizzazione esplicita. Ogni violazione costituisce un illecito doloso e comporterà il rilascio di danni subiti.
Copying of this document and giving it to others and the use or communication of the contents thereof, are forbidden without express authority. Contravention of this restriction will constitute an evident delict and result in a liability to the payment of damages. All rights are reserved in the event of the grant of patent or registration of a utility model or design. This document is the property of WABCO.