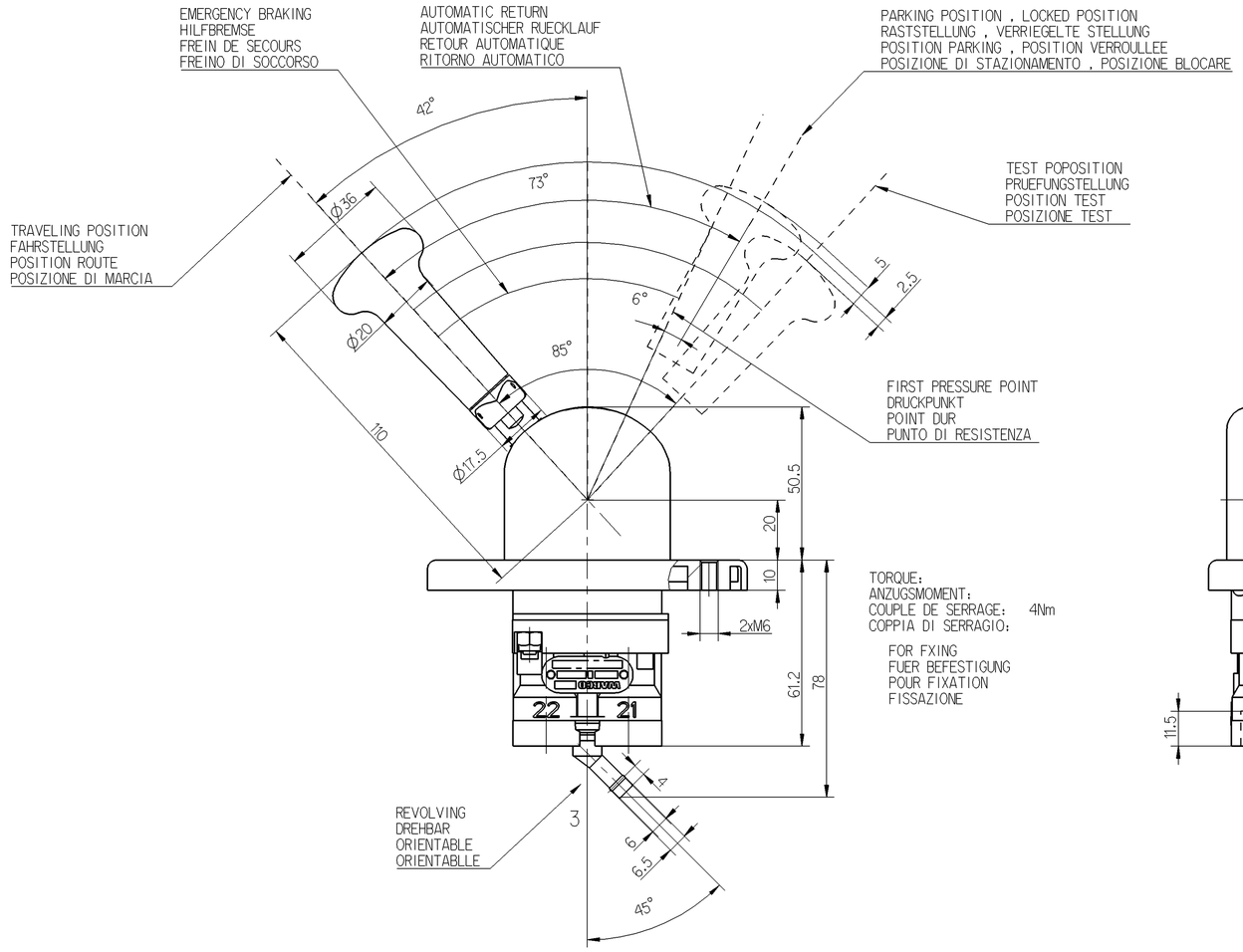

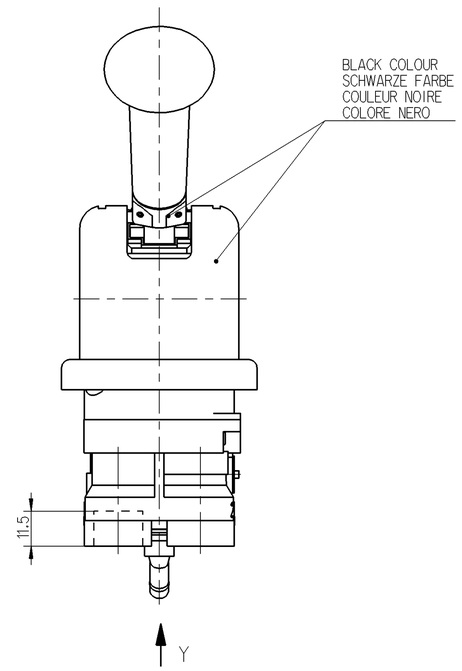

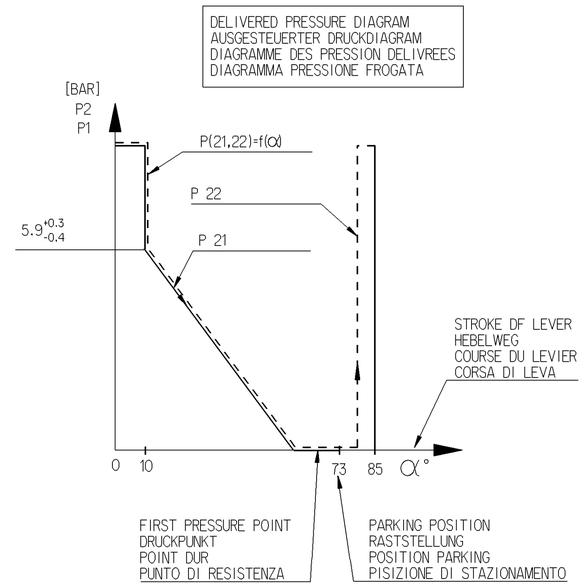

		SYMBOL SINNBILD SYMBOLE SIMBOLO
1	SUPPLY VORRAT ALIMENTATION ALIMENTAZIONE	
21	SPRING BRAKE CYLINDER FEDERSPEICHERZYLINDER CYLINDRE A RESSORT CILINDRO A MOLLA	
22	TRAILER CONTROL VALVE ANHAENGER STEUERVENTIL VALVE DE CONTROLE DEREMORQUE VALVOLA DI CONTROLLO DI RIMORCHIO	
3	EXHAUST ENTLUEFTUNG ECHAPPEMENT SCARICO	

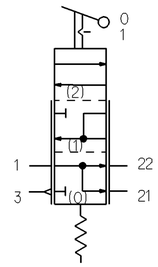

MEDIUM : AIR
MEDIUM : LUFT
FLUIDE : AIR
FLUIDO : ARIA

THERMICAL RANGE
THERMISCHER ANWENDUNGSBEREICH
TEMPERATURE D'UTILISATTION
TEMPERATURA DI UTILIZZAZIONE -40°...+80°C

P1 = 10 BAR MAX.

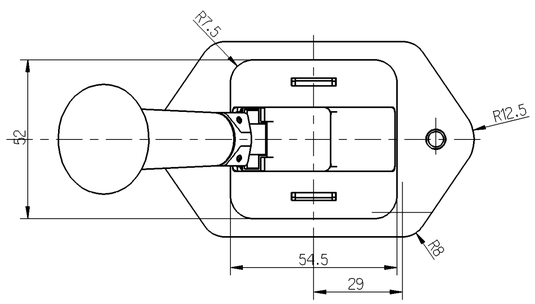

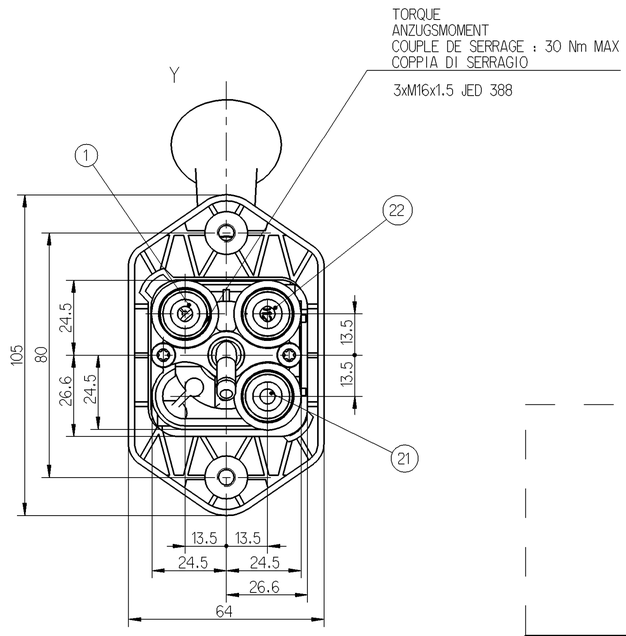

General Specification: JED-334-0			
Further Technical Data:			
Doc. Code:	Sheet:	To	

General Tolerances JED-261

Class 1)		Range of Nominal Dimensions (± mm) ≤ 50	> 50 ≤ 180	> 180 ≤ 400	> 400	∢
Fine		0.5	1.0	1.5	2.0	
Medium		1.0	2.0	3.0	4.0	±3°
Coarse	X	2.0	3.5	5.0	6.5	
Tapped Holes acc. JED-152						

1) Tolerance Class Applied Crossmarked

DCN-No.	Rev.	Date
State of Revision		

Copyright WABCO ®

	Date	Signature
Drawn	2007-07-06	Surmacz
Checked	2008-04-14	Sutor
Expert	SURMACZ	

WABCO

HAND BRAKE VALVE
HANDBREMSVENTIL
ROBINET DE FREINAGE A MAIN
RUBINETTO DI COMANDO A MANO

Mass	Scale	Material No.	WABCO Id. No.: 9617231430		
0.635 KG	1:1	961 723 143 0	Doc.Code 005	Language en/de fr/it	Sheet 1/1
Size A 1	TRI 530		Function Code	CAD System Pro/E	Prod.Type
			Replacement for		

100mm

Toute Communication ou reproduction de ce document, toute exploitation ou communication de son contenu sont interdites, sauf autorisation expresse. Tout manquement à cette règle constitue un délit, ouvrant droit à indemnisation des dommages et ouvre droit à brevet, modèle ou dessin ou modèle.

Non è permesso consegnare o farci o riprodurre questo documento, né utilizzare il contenuto o renderlo comunque noto a terzi senza autorizzazione esplicita. Ogni infrazione costituisce un illecito penale e comporta il risarcimento dei danni sulla base di brevetto, modello o disegno o modello.

Weitergabe sowie nicht durfnachdem zugelassenen, Verwertung und Mitteilung ihres Inhalts: nicht gestattet, soweit Verwendungen dieser Unterlage, zwiderhandlungen zivilen und strafrechtlichen Mindbruch dar und Ansprüche für den Fall der Patenterteilung oder Gebrauchsmustereintragung verpflichten.

Copying of this document and giving it to others and the use or communication of the contents thereof, are not permitted without express authority. Contravention of this restriction constitutes an evident delict and result in a liability to the payment of damages. All rights are reserved in the event of the grant of a patent or registration of a utility model or design.

dwg. 9617231430_005 / Version: 0 / date: / Approved: / rel: 9617231430_002