THE LOCKING DEVICE MUST AUTOMATICALLY AND SAFETY LOCK THE HANDLE IN THE PARKING POSITION

<1> DIE VERRASTUNG MUSS DEN HEBEL AUTOMATISCH UND SICHER IN DER PARKPOSITION HALTEN

LA BUTEE DOIT VERROUILLER AUTOMATIQUEMENT ET DE FACON SECURISEE LA POIGNEE EN POSITION PARKING

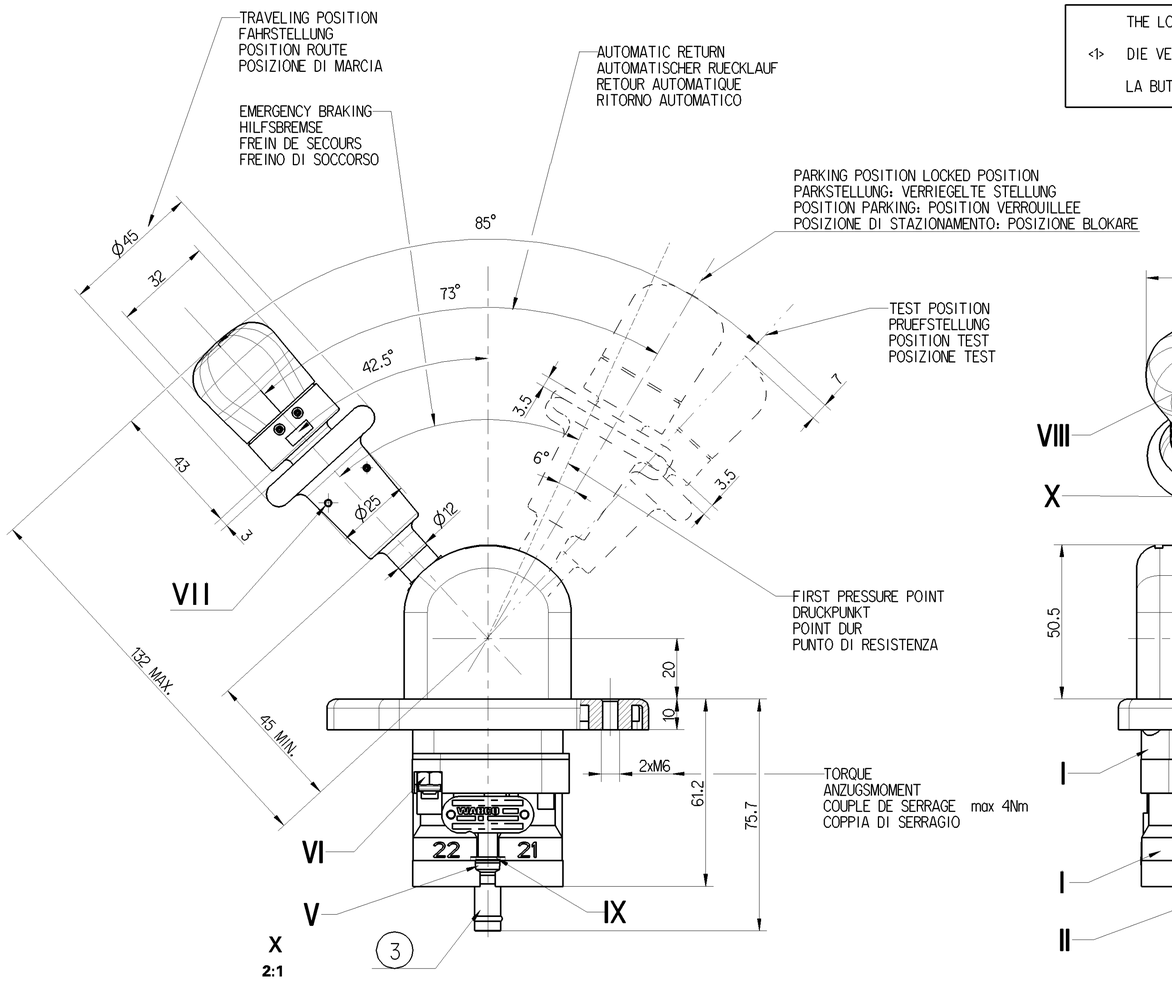

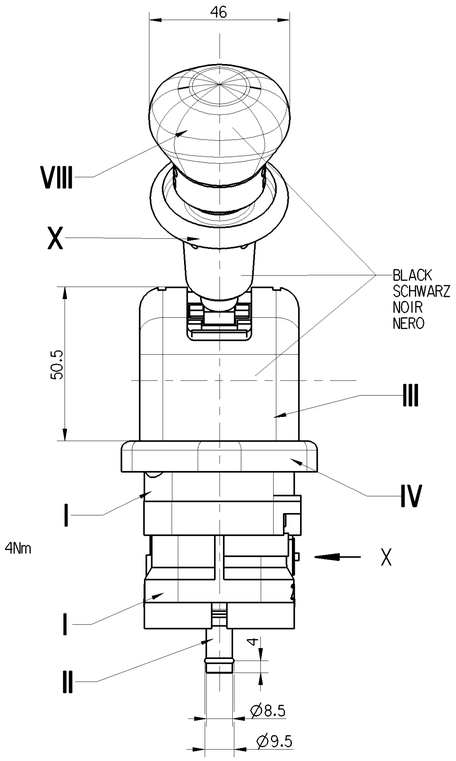

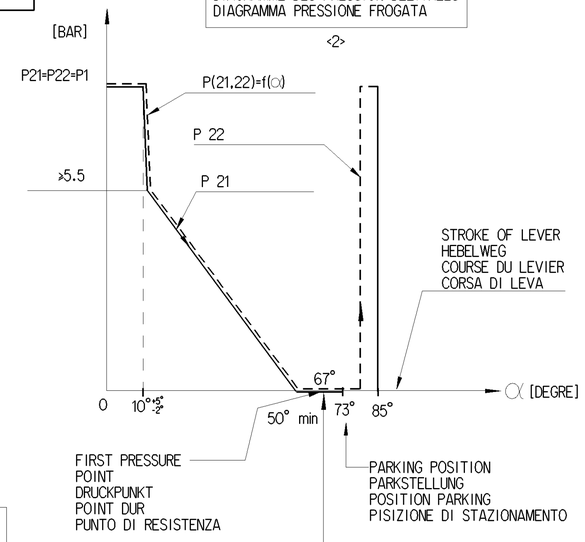

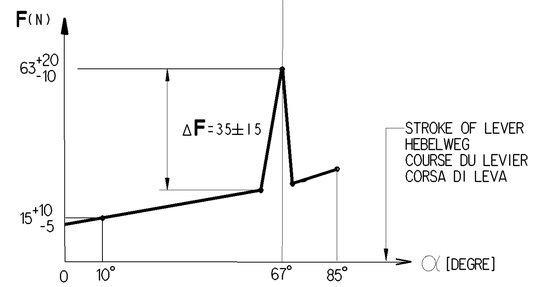

MARKING OF PORTS KENNZEICHNUNG DER ANSCHLUESSE MARQUAGE DES ORIFICES MARCATURA DEGLI ORIFIZI	
1	SUPPLY VORRAT ALIMENTATION ALIMENTAZIONE
21	SPRING BRAKE CYLINDER FEDERSPEICHERZYLINDER CYLINDRE A RESSORT CILINDRO A MOLLA
22	TRAILER CONTROL VALVE ANHAENGER STEUERVENTIL VALVE DE CONTROLE DEREMORQUE VALVOLA DI CONTROLLO DI RIMORCHIO
3	EXHAUST ENTLUEFTUNG ECHAPPEMENT SCARICO

GENERAL DATA ALLGEMEINE DATEN CARACTERISTIQUES GENERALES CARATTERISTICHE GENERALI	
MEDIUM : AIR MEDIUM : LUFT FLUIDE : AIR FLUIDO : ARIA	
THERMICAL RANGE THERMISCHER ANWENDUNGSBEREICH TEMPERATURE D'UTILISATTION TEMPERATURA DI UTILIZZAZIONE	-40°...+80°C
SUPPLY PRESSURE VORRATSDRUCK PRESSION PNEUMATIOQUE D'ALIMENTATION PRESSIONE PNEUMATICA DI ALIMENTAZIONE	P1=10 BAR MAX

SPECIAL CHARACTERISTICS BESONDERE MERKMALE CARACTERISTIQUES SPECIALES CARATTERISTICHE SPECIALI	2x<>

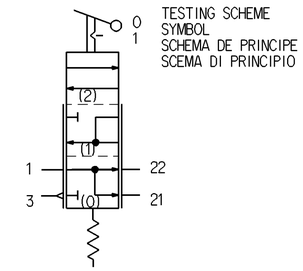

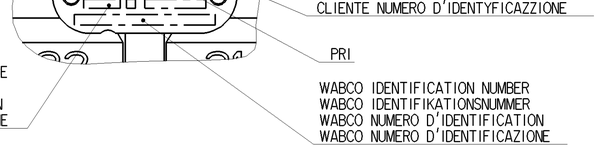

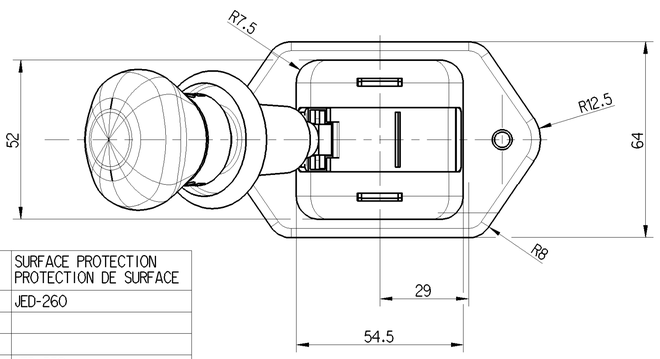

TORQUE
ANZUGSMOMENT
COUPLE DE SERRAGE : 34 Nm MAX
COPPIA DI SERRAGIO

3xM16x1.5 JED-388

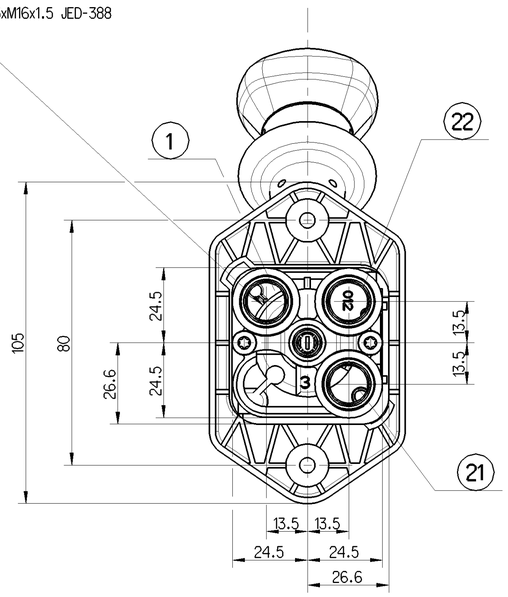

	MATERIAL MATIERE	SURFACE PROTECTION PROTECTION DE SURFACE
I	JED-004M	JED-260
II	JED-326	
III	JED-776-1	
IV	JED-029 M1	JED-259
V	JED-679.0	JED-256
VI	JED-051 M2	JED-257
VII	JED-061 MO	
VIII	SNEVYL GSE 7235	
IX	JED-021 M1	JED-257
X	AKULON S240C	

General Specifications: JED-334-1 , Size ISO 14405 LP						
Further Technical Data:						
Doc. Code:		Sheet:		To		
General Tolerances JED-261						
		Range of Nominal Dimensions (± mm)				
Class 1)		≤ 50	> 50 ≤ 180	> 180 ≤ 400	> 400	∢
Fine		0.5	1.0	1.5	2.0	±3°
Medium		1.0	2.0	3.0	4.0	
Coarse	X	2.0	3.5	5.0	6.5	
Tapped Holes acc. JED-152/JED-388						
1) Tolerance Class Applied Crossmarked						

Copyright WABCO®

Date	Signature
Drawn 2015-07-31	Krylo
Checked 2015-07-31	Zabieglo
Expert Swiatek	

WABCO

HAND BRAKE VALVE
HANDBREMSVENTIL
ROBINET DE FREINAGE A MAIN
RUBINETTO DI COMANDO A MANO

Mass	Scale	Material No.	Date of first issue: 2015-07-31	
0.662 KG	1:1	961 723 150 0	Doc.Code 005	Language MIL / Sheet 1/1
Size A 1	CAD System CREO			

ECN-No.	Revision	Techn. Resp.	Replacement for
-	- -	5212	884 007 516 0

100mm

Toute Communication ou reproduction de ce document, toute exploitation ou communication de son contenu sont interdites, sauf autorisation écrite. Tous droits de propriété industrielle réservés, notamment en matière de brevets ou de modèles.

Weitergabe sowie Vervielfältigung dieser Unterlage, Verwertung und Mitteilung ihres Inhalts nicht gestattet, soweit nicht ausdrücklich gestattet. Zuwiderhandlungen verpflichten zu Schadensersatz. Alle Rechte für den Fall der Patent-, Gebrauchsmuster- oder Geschmacksmustereintragung vorbehalten.

Non è permesso consegnare a terzi o riprodurre questo documento, né utilizzare il contenuto o renderlo comunque noto a terzi senza autorizzazione scritta. Tutti i diritti di proprietà industriale sono riservati, in particolare quelli di brevetti o modelli.

Copying of this document and giving it to others and the use or communication of the contents thereof, are forbidden without express authority. Offenders are liable to the payment of damages. All rights are reserved in the event of the grant of patent or registration of a utility model or design. This document is the subject of copyright.