<1> THE LOCKING DEVICE MUST AUTOMATICLY AND SAFETY LOCK THE HANDLE IN THE PARKING POSITION

LA BUTEE DOIT VERROUILLER AUTOMATIQUEMENT ET DE FACON SECURISEE LA POIGNEE EN POSITION PARKING

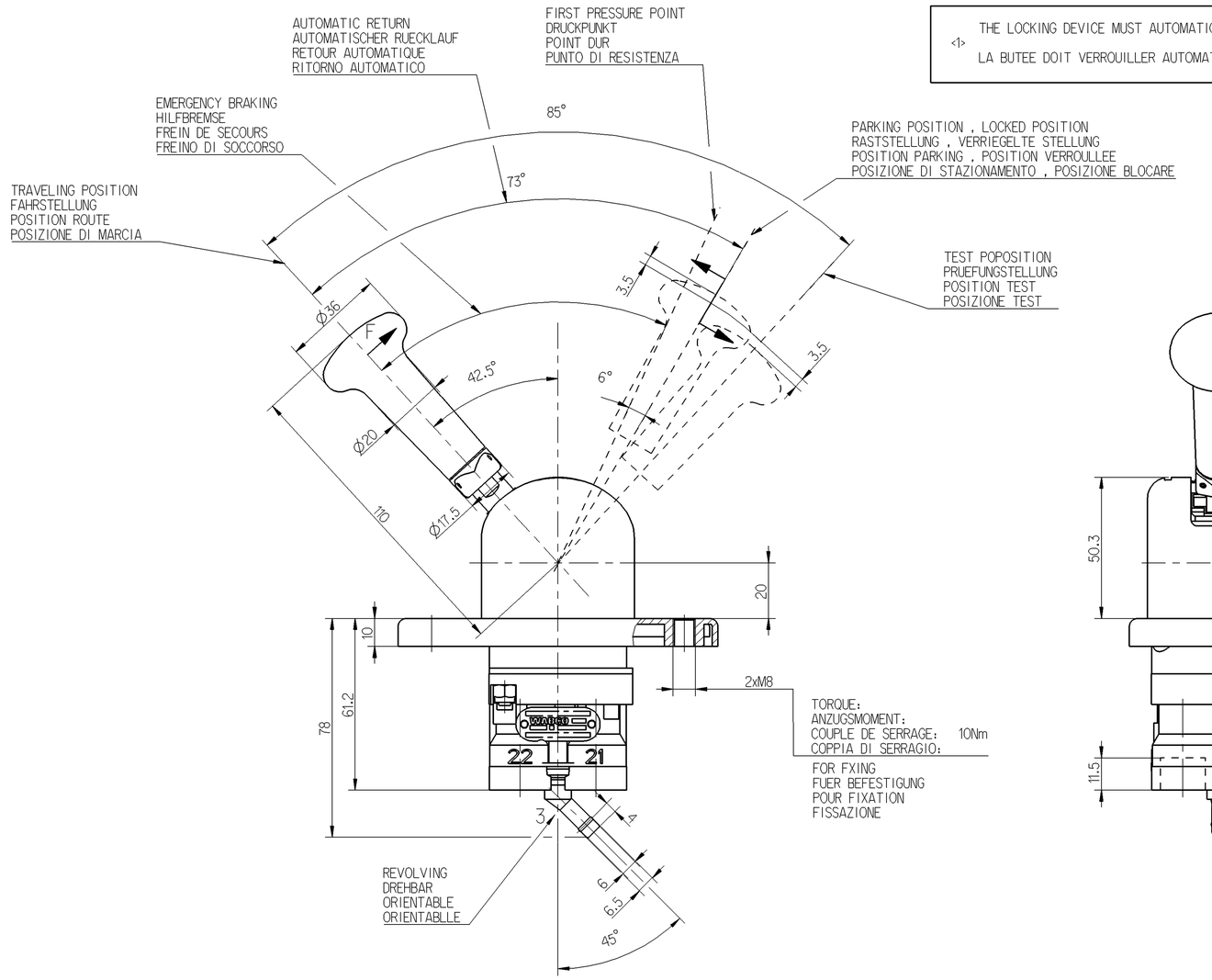

1x<> SPECIAL CHARACTERISTICS
BESONDERE MERKMALE
CARACTERISTIQUES SPECIALES
CARATTERISTICHE SPECIALI

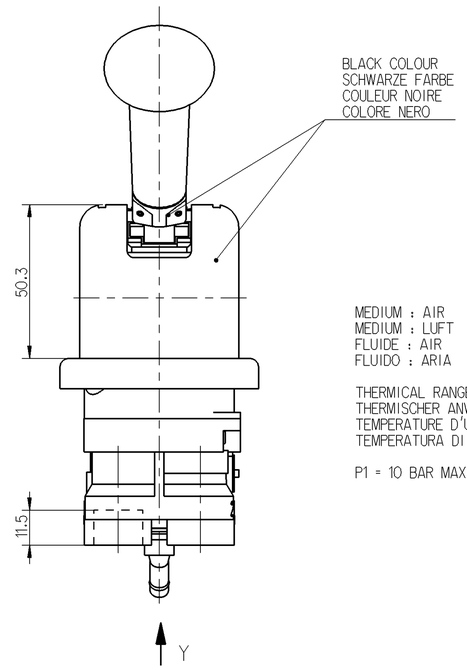

MEDIUM : AIR
MEDIUM : LUFT
FLUIDE : AIR
FLUIDO : ARIA

THERMICAL RANGE
THERMISCHER ANWENDUNGSBEREICH
TEMPERATURE D'UTILISATTION
TEMPERATURA DI UTILIZZAZIONE -40°...+80°C

P1 = 10 BAR MAX.

DELIVERED PRESSURE DIAGRAM
AUSGESTEUERTER DRUCKDIAGRAM
DIAGRAMME DES PRESSION DELIVREES
DIAGRAMMA PRESSIONE FROGATA

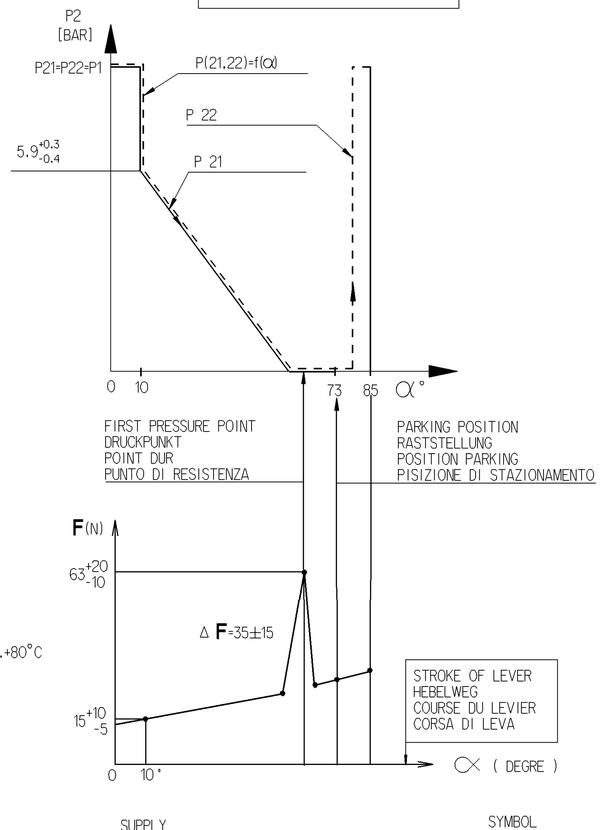

	SUPPLY VORRAT ALIMENTATION ALIMENTAZIONE
1	
21	SPRING BRAKE CYLINDER FEDERSPEICHERZYLINDER CYLINDRE A RESSORT CILINDRO A MOLLA
22	TRAILER CONTROL VALVE ANHAENGER STEUERVENTIL VALVE DE CONTROLE DEREMORQUE VALVOLA DI CONTROLLO DI RIMORCHIO
3	EXHAUST ENTLUEFTUNG ECHAPPEMENT SCARICO

SYMBOL
SINNBILD
SYMBOLE
SIMBOLO

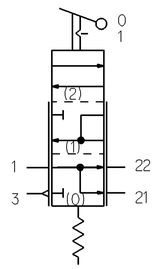

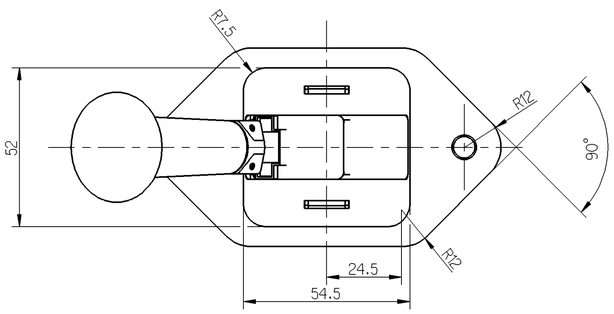

TORQUE
ANZUGSMOMENT
COUPLE DE SERRAGE : 30 Nm MAX
COPPIA DI SERRAGIO

3xM16x1.5 JED 388

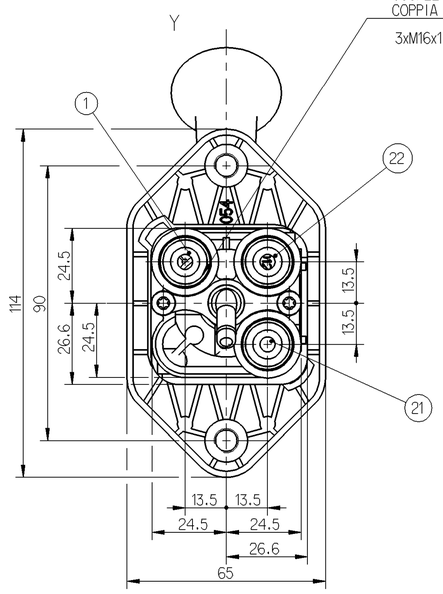

General Specification: JED-334-0						
Further Technical Data: Product Specification 9617231560						
Doc. Code: 035			Sheet:		To	
General Tolerances JED-261						
		Range of Nominal Dimensions (± mm)				
Class 1)		≤ 50	> 50 ≤ 180	> 180 ≤ 400	> 400	∢
Fine		0.5	1.0	1.5	2.0	
Medium		1.0	2.0	3.0	4.0	±3°
Coarse	X	2.0	3.5	5.0	6.5	
Tapped Holes acc. JED-152						
1) Tolerance Class Applied Crossmarked						

Copyright WABCO®

Date	Signature
Drawn 2011-05-25	Swiatek
Checked 2011-05-25	Lichtenberg
Expert SURMACZ	

WABCO

HAND BRAKE VALVE
HANDBREMSVENTIL
ROBINET DE FREINAGE A MAIN
RUBINETTO DI COMANDO A MANO

Mass	Scale	Material No.	Date of first issue: 2011-05-25		
0.635 KG	1:1	961 723 156 0	Doc.Code 005	Language ML	Sheet 1/1
Size A 1	CAD System Pro/E	ECN-No. -	Revision - -	Techn. Resp. 5212	Replacement for

100mm

Tout Communication ou reproduction de ce document, toute exploitation ou communication de son contenu sont interdites, sauf autorisation expresse. Tout manquement à cette règle constitue un délit, entraînant le versement de dommages et intérêts. Tous droits réservés, en particulier en cas de délivrance de brevet ou de dépôt d'un modèle d'utilité.

Weitergabe sowie Vervielfältigung dieser Unterlage, Verwertung und Mitteilung ihres Inhalts nicht gestattet, soweit nicht ausdrücklich zugestanden. Zuwiderhandlungen ziehen einen Schadenersatz nach sich. Alle Rechte für den Fall der Patenterteilung oder eingetragenen Gebrauchsmustereintragung vorbehalten.

Non è permesso consegnare o farci o riprodurre questo documento, né utilizzare il contenuto o renderlo comunque noto a terzi senza espressa autorizzazione. Il mancato rispetto di questa regola costituisce un reato, che comporta il risarcimento dei danni. Tutti i diritti riservati, in particolare in caso di rilascio di brevetto o di registrazione di un modello di utilità.

Copying of this document and giving it to others and the use or communication of the contents thereof, are forbidden without express authority. Contravention of this restriction will constitute an evident abuse and result in a liability to the payment of damages. All rights are reserved in the event of the grant of patent or registration of a utility model or design. The character is the subject of copyright.

dms: 9617231560_005 / version: 2 date: Approved / sub: 9617231560_002