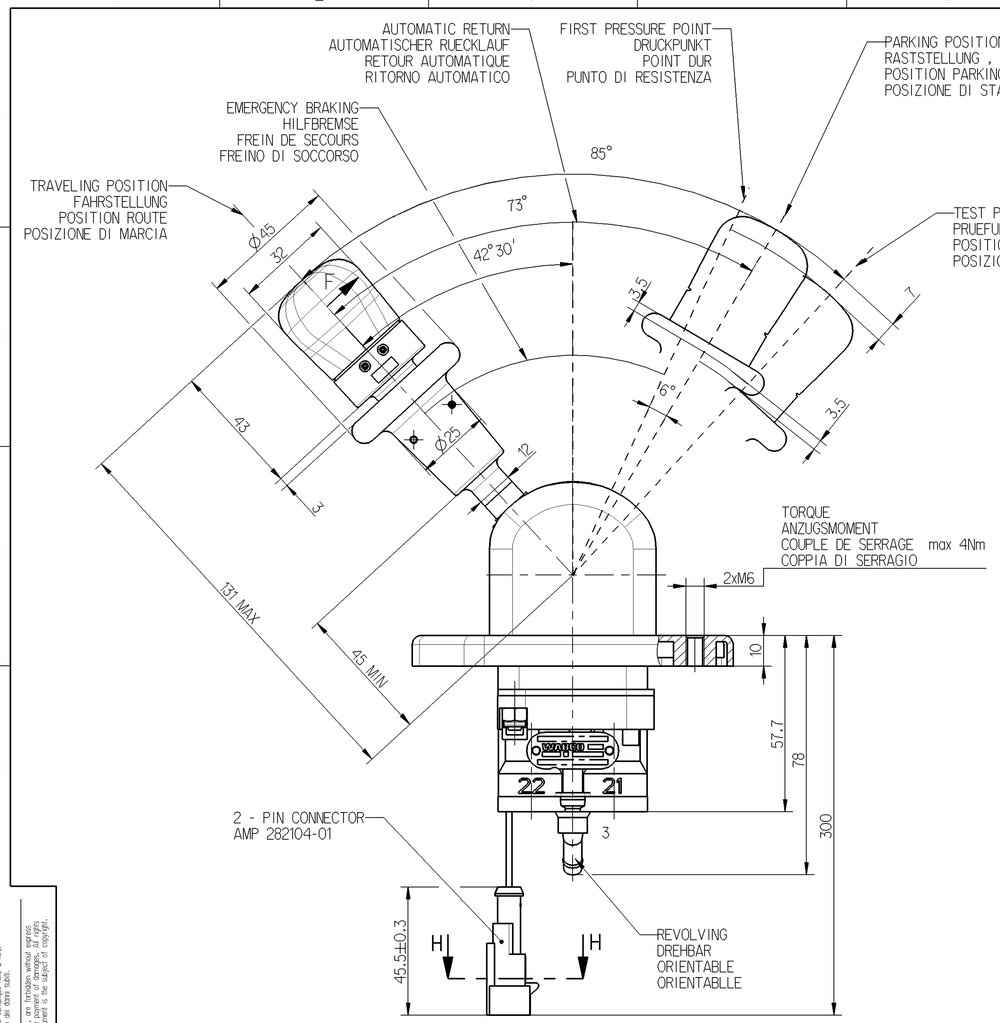

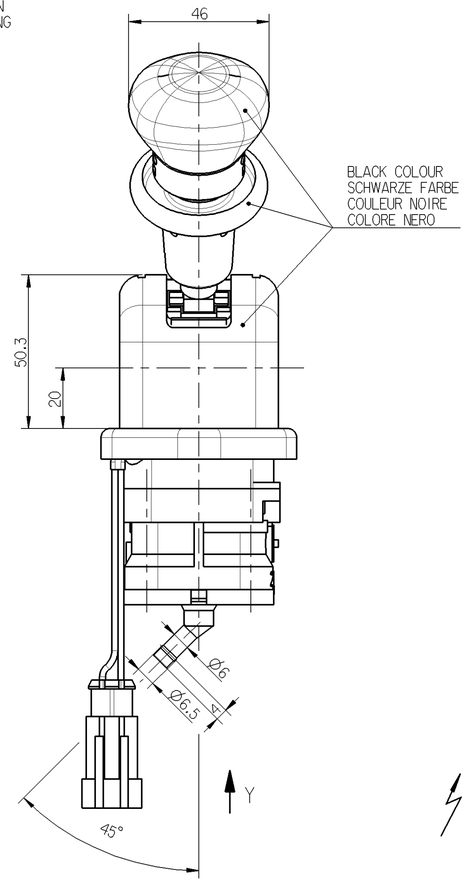

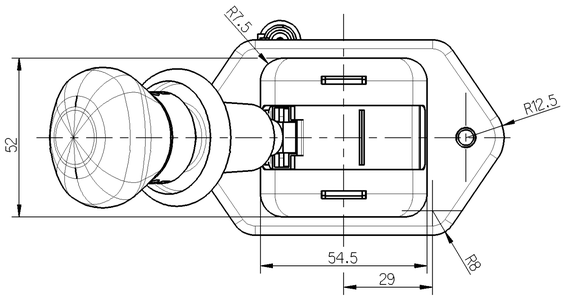

H-H

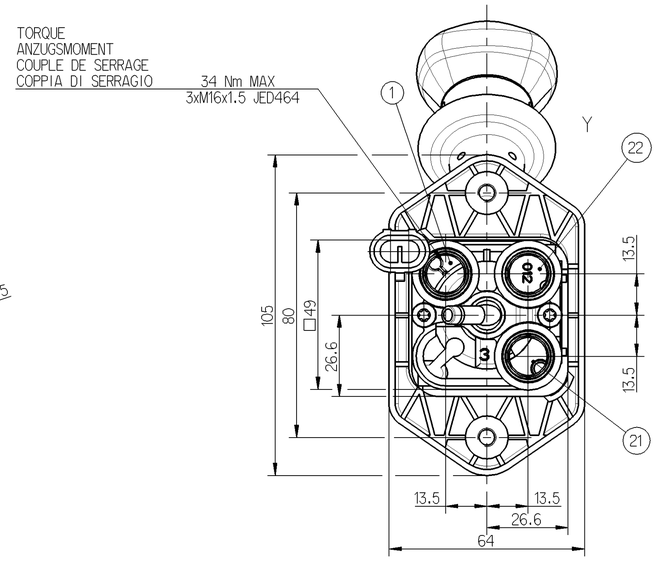

Tout Communication ou reproduction de ce document, toute exploitation ou communication de son contenu sont interdites, sauf autorisation expresse. Tout manquement à cette règle constitue un délit, ouvrant le coupable au paiement de dommages et intérêts. Tous droits réservés, notamment en cas de brevet, de modèle de utilité ou de dessin et modèle.

Weitergabe sowie Vervielfältigung dieser Unterlage, Verwertung und Mitteilung ihres Inhalts nicht gestattet, soweit nicht ausdrücklich zugestanden. Zuwiderhandlungen stehen einer schadensersatzpflichtigen Verletzung. Alle Rechte vorbehalten, insbesondere für den Fall der Patenterteilung oder Gebrauchsmuster-Eintragung vorbehalten.

Non è permesso consegnare o terzi o riprodurre questo documento, né utilizzare il contenuto o renderlo comunque noto a terzi senza autorizzazione scritta. Ogni violazione costituisce un illecito civile e comporterà il relativo obbligo di risarcimento. Tutti i diritti riservati, in particolare in caso di brevetto, di modello di utilità o di disegno o modello.

Copying of this document and giving it to others and the use or communication of the contents thereof, are forbidden without express authority. Contravention of this restriction will constitute an incident cause and result in a liability to the payment of damages. All rights are reserved in the event of the grant of a patent or registration of a utility model or design. The reserved rights are subject to copyright.

<1> THE LOCKING DEVICE MUST AUTOMATICLY AND SAFETY LOCK THE HANDLE IN THE PARKING POSITION

LA BUTEE DOIT VERROUILLER AUTOMATIQUEMENT ET DE FACON SECURISEE LA POIGNEE EN POSITION PARKING

1x<> SPECIAL CHARACTERISTICS
BESONDERE MERKMALE
CARACTERISTIQUES SPECIALES
CARATTERISTICHE SPECIALI

MARKING OF PORTS
KENNZEICHNUNG DER ANSCHLUESSE
MARQUAGE DES ORIFICES
MARCATURA DEGLI ORIFIZI

1 SUPPLY
VORRAT
ALIMENTATION
ALIMENTAZIONE

21 SPRING BRAKE CYLINDER
FEDERSPEICHERZYLINDER
CYLINDRE A RESSORT
CILINDRO A MOLLA

22 TRAILER CONTROL VALVE
ANHAENGER STEUERVENTIL
VALVE DE CONTROLE DEREMORQUE
VALVOLA DI CONTROLLO DI RIMORCHIO

3 EXHAUST
ENTLUEFTUNG
ECHAPPEMENT
SCARICO

TESTING SHEME
SYMBOL
SCHEMA DE PRINCIPE
SCHEMA DI PRINCIPIO

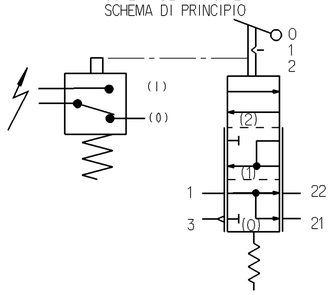

GENERAL DATA
ALLGEMEINE DATEN
CARACTERISTIQUES GENERALES
CARATTERISTICHE GENERALI

MEDIUM : AIR
MEDIUM : LUFT
FLUIDE : AIR
FLUIDO : ARIA

THERMICAL RANGE
THERMISCHER ANWENDUNGSBEREICH
TEMPERATURE D'UTILISATTION
TEMPERATURA DI UTILIZZAZIONE
-40°...+80°C

P1 = 10 BAR MAX.

DELIVERED PRESSURE DIAGRAM
AUSGESTEUERTER DRUCKDIAGRAM
DIAGRAMME DES PRESSION DELIVREES
DIAGRAMMA PRESSIONE FROGATA

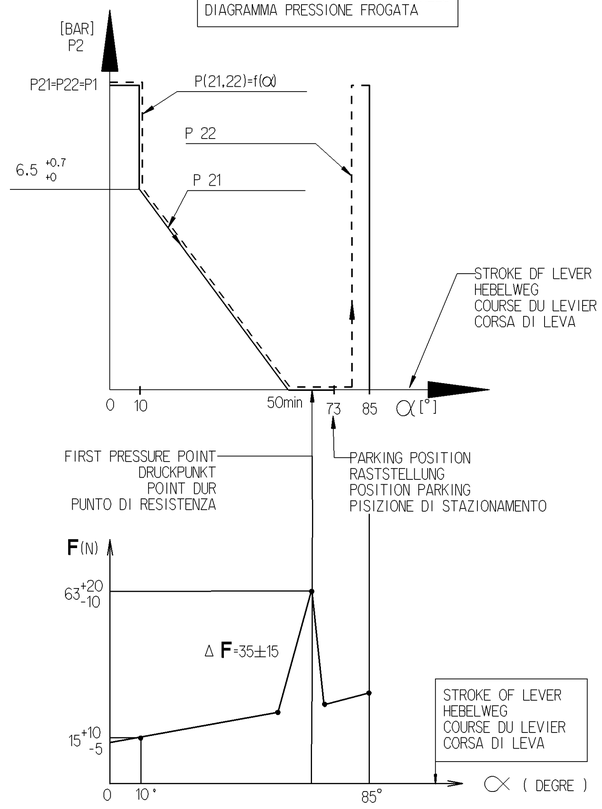

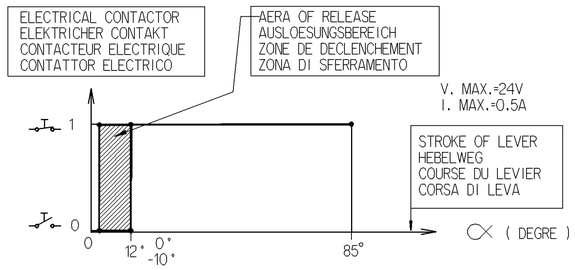

General Specification: JED-334-0						
Further Technical Data: Product Specification 9617231570						
Doc. Code: 035			Sheet:		To	
General Tolerances JED-261						
	Range of Nominal Dimensions (± mm)					
Class 1)	≤ 50	> 50 ≤ 180	> 180 ≤ 400	> 400		
Fine	0.5	1.0	1.5	2.0	±3°	
Medium	1.0	2.0	3.0	4.0		
Coarse X	2.0	3.5	5.0	6.5		
Tapped Holes acc. JED-152						
1) Tolerance Class Applied Crossmarked						

Copyright WABCO®

Date	Signature
Drawn 2011-05-31	Swiatek
Checked 2011-05-31	Surmacz
Expert SURMACZ	

WABCO

HAND BRAKE VALVE
HANDBREMSVENTIL
ROBINET DE FREINAGE A MAIN
RUBINETTO DI COMMANDO A MANO

Mass	Scale	Material No.	Date of first issue: 2011-05-31		
0.640 kG	1:1	961 723 157 0	Doc.Code 005	Language ML	Sheet 1/1
Size A 1	CAD System Pro/E		ECN-No. -	Revision -	Techn. Resp. 5212
			Replacement for -		

100mm

dre: 9617231570_____005 / version: 02 / date: 6.01.2011 / nab: 9617231570_____A02