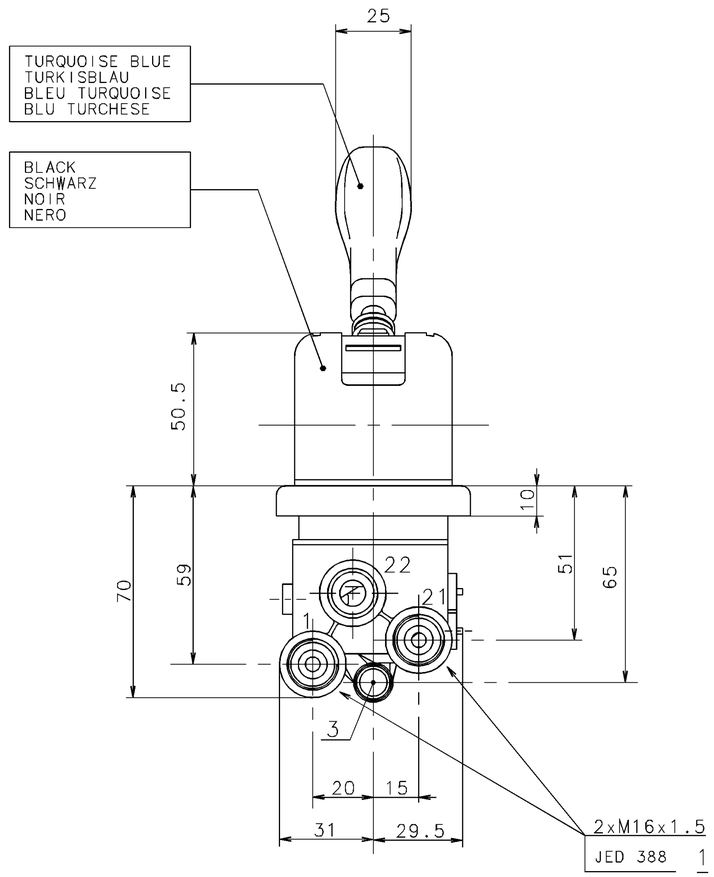


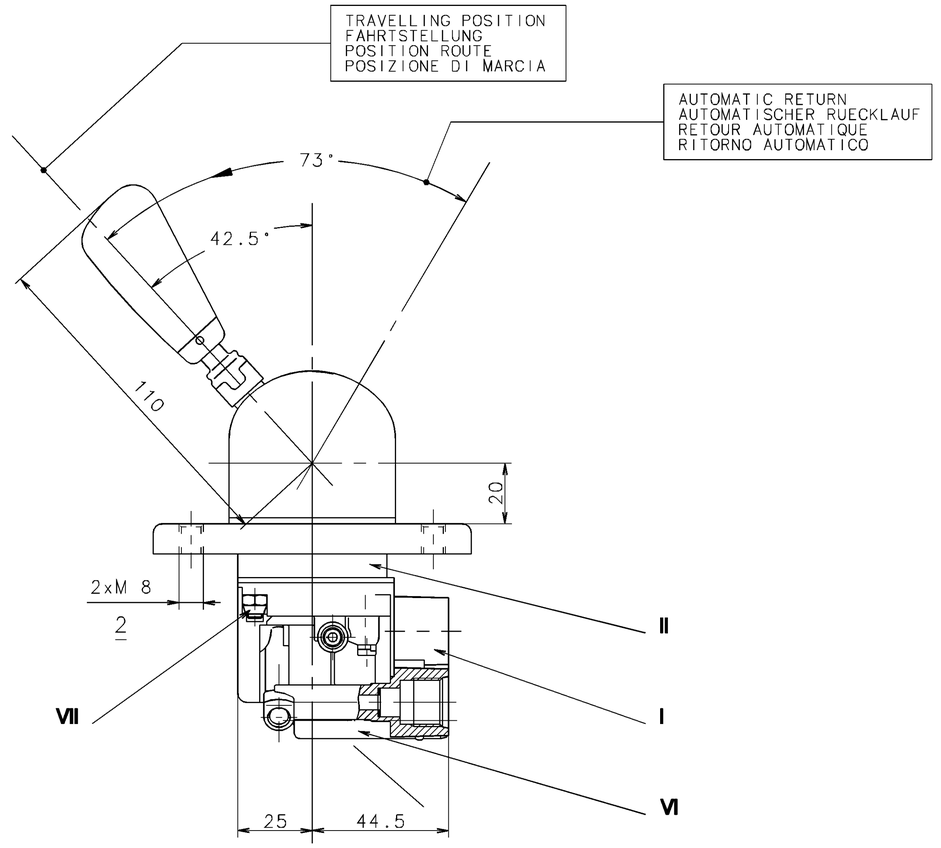


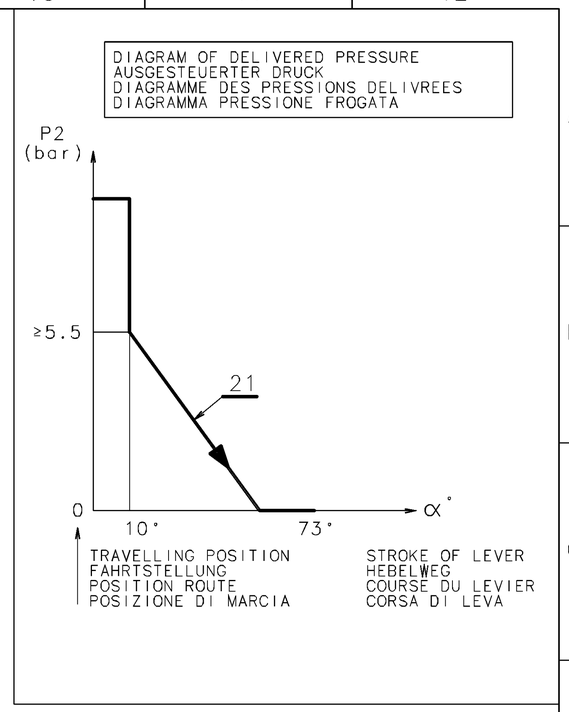


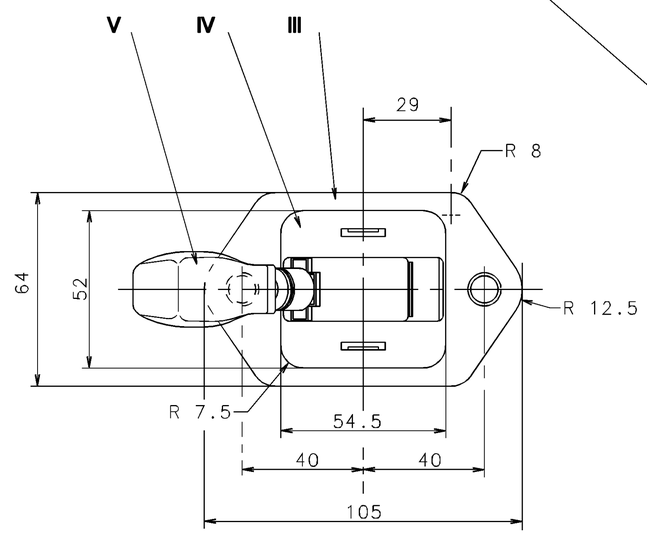


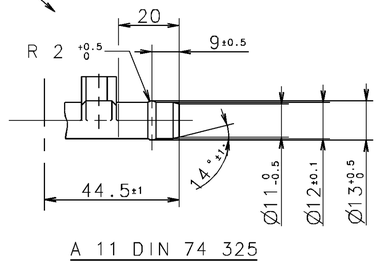


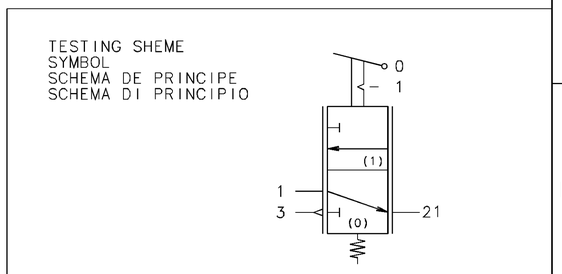


| | | |
|---|---|---|
| VII | JED 051 M4/Fe | JED 378 |
| VI | JED 005 M2/POM | |
| V | PVC | |
| IV | ABS | |
| III | JED 029 M1/Al | JED 259 |
| II | JED 004 M/Z | JED 260 |
| I | JED 004 M/Z | JED 260 |
| | - MATERIAL<br>-<br>- MATIERE<br>- | - SURFACE PROTECTION<br>-<br>-PROTECTION DE SURFACE<br>- |

| | | |
|---|---|---|
| 1 | SUPPLY<br>VORRAT<br>ALIMENTATION<br>ALIMENTAZIONE | MEDIUM : AIR<br>MEDIUM : LUFT<br>FLUIDE : AIR<br>FLUIDO : ARIA |
| 21 | SPRING BRAKE CYLINDER<br>FEDERSPEICHERZYLINDER<br>CYLINDRE A RESSORT<br>CILINDRO A MOLLA | THERMAL RANGE<br>THERM.ANWENDUNGSBEREICH<br>TEMPERATURE D'UTILISATION<br>TEMPERATURA DI UTILIZZAZIONE<br>-40°....+80°C |
| 3 | AIR EXHAUST<br>ENTLUEFTUNG<br>ECHAPPEMENT<br>SCARICO | SUPPLY PRESSURE<br>VORRATSDRUCK<br>PRESSION PNEUMATIQUE D'ALIMENTATION<br>PRESSIONE PNEUMATICA DI ALIMENTAZIONE<br>$P_1$ = 10 bar MAX. |

| | | |
|---|---|---|
| TORQUE<br>ANZUGSMOMENT<br>COUPLE DE SERRAGE<br>COPPIA DI SERRAGGIO | 1 | 34 N.m MAX |
| | 2 | 10 N.m MAX |

FURTHER TECHNICAL DATA SEE
IDENTIFICATION NO.:
CODE FOR DOCUMENT: 605 SHEET: TO

GENERAL TOLERANCES

| CLASS | RANGE OF NOMINAL DIMENSIONS (± mm) 1) | ≤50 | > 50 ≤180 | >180 ≤400 | >400 | ∡ |
|---|---|---|---|---|---|---|
| I | | 0,5 | 1,0 | 1,5 | 2,0 | ± 3° |
| II | | 1,0 | 2,0 | 3,0 | 4,0 | |
| III | | 2,0 | 3,5 | 5,0 | 6,5 | |

TAPPED HOLES ACC. ISO 4039
1) TOLERANCE CLASS APPLIED CROSSMARKED

| DCN-NO. | REV. | DATE |
|---|---|---|
| | L | |
| | K | |
| | J | |
| | H | |
| | G | |
| | F | |
| | E | |
| | D | |
| | C | |
| | B | |
| | A | |

COPYRIGHT

WABCO

| DATE | SIGNATURE | |
|---|---|---|
| DRAWN 95/02/24 | TYSSANDIER | HAND BRAKE VALVE |
| CHECKED 95/02/24 | LIEMOUX | HANDBREMSVENTIL |
| STANDARDIZATION 95/02/24 | 95030 | ROBINET DE FREINAGE A MAIN |
| | | ROBINETTO DI COMMANDO A MANO |

| MASS | SCALE | PRODUCT IDENTIFICATION NO. | CODE FOR DOCUMENT | SHEET |
|---|---|---|---|---|
| kg | 1:1 | 961 723 421 0 | 605 | 1/1 |
| SIZE A 1 | T.R.I. 210 | CODE F.PROD.-GROUP 521 | CODE FOR SHAPE | REPLACEMENT FOR |

100mm

EXPERT CODE TYPE OF PRODUCT

DIES E PRINCIPI CONTENUTI IN QUESTO DOCUMENTO, NE QUELLI CONTENUTI NEI DISEGNI, NE QUELLI DESCRITTI NELLE NOTE A LEGGI SONO PROPRIETÀ DI PROPRIETÀ INDUSTRIALE. LA AUTORIZZAZIONE ESPLICITA, CON RIFIALONE COSTITUISCE UN REATO PERSEGUIBILE DI DANNI SUBITI. È FATTA RISERVA DI TUTTI I DIRITTI DERIVANTI DAI BREVETTI O MODELLI.
COPYRIGHT © 2015 ARE PROVIDED AND GIVING IT TO OTHERS AND THE USE OR COMMUNICATION OF THE CONTENTS THEREOF ARE FORBIDDEN WITHOUT EXPRESS AUTHORITY. OFFENDERS ARE LIABLE TO PAY DAMAGES. ALL RIGHTS ARE CONSTITUTE AN EVIDENT ABUSE AND RESULT IN A LIABILITY TO THE PAYMENT OF DAMAGES. ALL RIGHTS ARE RESERVED IN THE EVENT OF THE GRANT OF A PATENT OR THE REGISTRATION OF AN UTILITY MODEL OR DESIGN.
MITTEILUNG IHRES INHALTS STELLEN EINEN OFFENSICHTLICHEN MISSBRAUCH DAR UND VERPFLICHTEN ZU SCHADENSATZ. ALLE RECHTE FÜR DEN FALL DER PATENTERTEILUNG ODER EINTRAGUNG EINES GEBRAUCHSMUSTERS VORBEHALTEN.
CETTE COMMUNICATION OU REPRODUCTION DE CE DOCUMENT, TOUT EXPLOITATION OU COMMUNICATION DE SES CONTENUS SONT INTERDITES. SAUF AUTORISATION EXPRESSE, TOUTE MANQUEMENT A CETTE REGLE CONSTITUE UN ABUS SUSCEPTIBLE DE PROPRIETE INDUSTRIELLE ET EXPOSE SON AUTEUR AU VERSEMENT DE DOMMAGES ET INTERETS. TOUS DROITS RESERVES AU DEPOT D'UN BREVET D'INVENTION OU D'UN MODELE DE DESSIN OU MODELE.
NICHT GESTATTET. SOFEIT NICHT AUSDRÜCKLICH ZUGESTANDEN, ZUWIDERHANDLUNGEN VERPFLICHTEN ZU SCHADENSERSATZ. ALLE RECHTE FÜR DEN FALL DER PATENTERTEILUNG ODER GEBRAUCHSMUSTEREINTRAGUNG VORBEHALTEN.

86-01