<1> THE LOCKING DEVICE MUST AUTOMATICALLY AND SAFETY LOCK THE HANDLE IN THE PARKING POSITION

<1> SAFETY CHARACTERISTICS	1
<2> SIGNIFICANT CHARACTERISTICS	2

MARKING OF PORTS

1	SUPPLY
21	SPRING BRAKE CYLINDER
22	TRAILER CONTROL VALVE
3	EXHAUST

	MATERIAL			SURFACE PROTECTION	
I	JED-775-6	PPA, reinforced			
II		GRIVORY HTVSH			
III		D011 svt EN 10111 ep. 1. 5			CATAPHORESE NOIRE 400h BS
IV	JED-465-2	ABS			
V		DELRIN 107 ou 577 BK			
VI	JED-051M4			JED-378-2	Inorganic coating Zn/Al

THERMAL RANGE OF APPLICATION	-40°C... +80°C
SUPPLY PRESSURE	P1=8.5 bar
PROTECTION CLASS ACC. TO	ISO 20653 IP5K6K
MEDIUM	AIR

3/2 DIRECTIONAL CONTROL VALVE	
FORCE OUTPUT	F2=80 N MAX (8.5 bar)
CHANGE-OVER AT PRESSURE DROP BELOW $4^{0}_{-0.6}$ bar LINE "1" CLOSED LINE "2" EXHAUSTED	
IF THE RESERVOIR PRESSURE IS HIGHER THAN 4 bar OPERATING CONDITION MAY BE RESTORED BY PUSHING THE KNOB	<2>

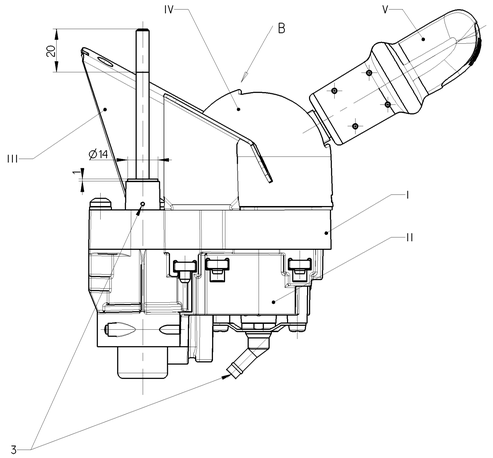

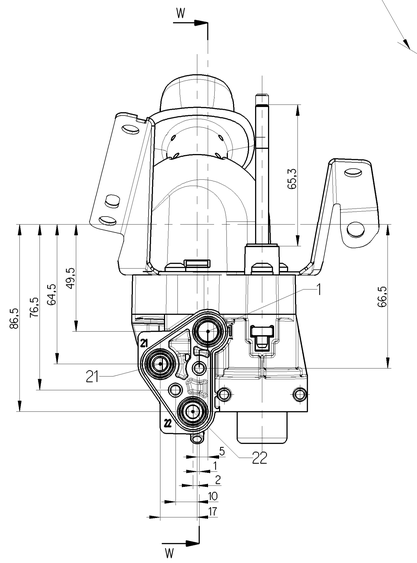

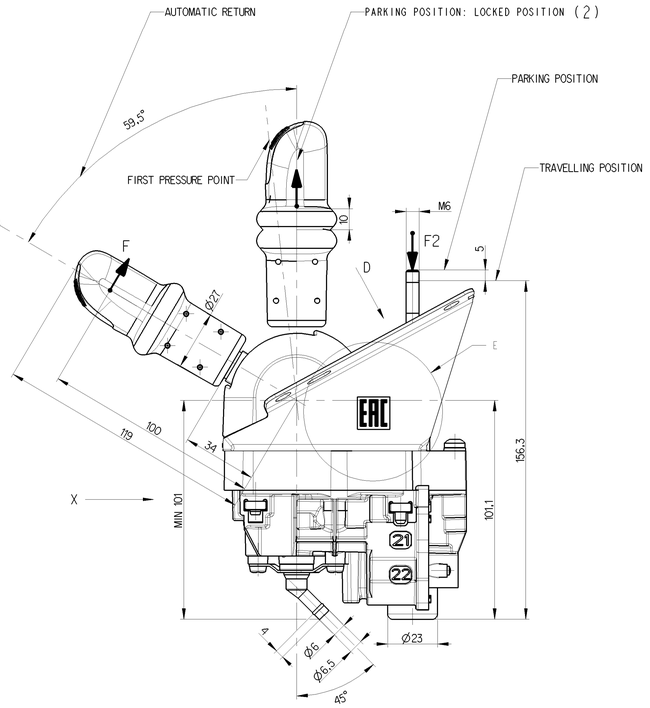

W-W
2:1

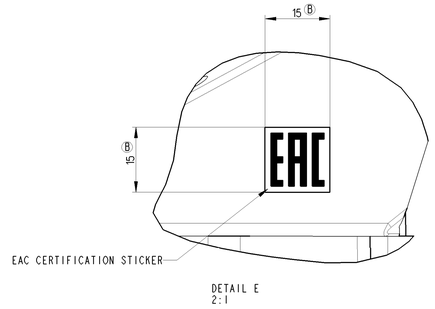

DETAIL E
2:1

DELIVERED PRESSURE DIAGRAM <2>

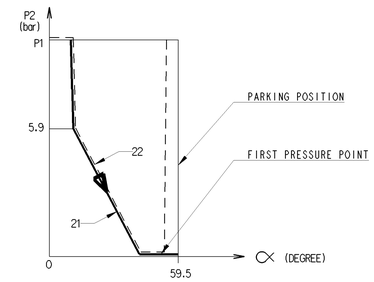

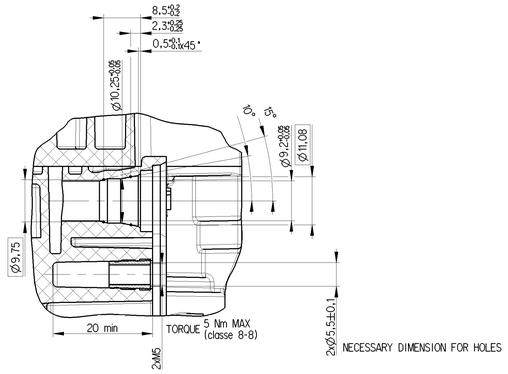

X
1:1

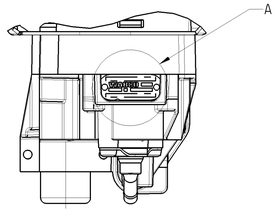

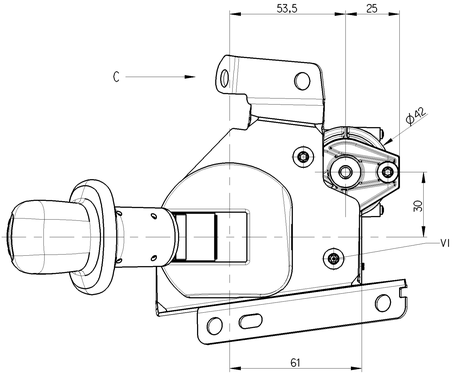

TESTING SCHEME

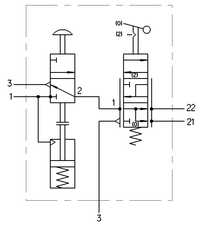

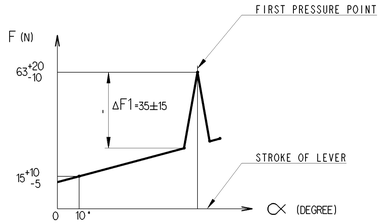

B
1:1

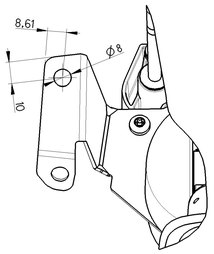

C
1:1

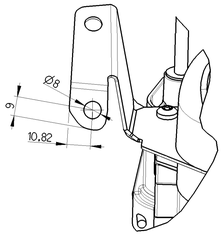

D
1:1

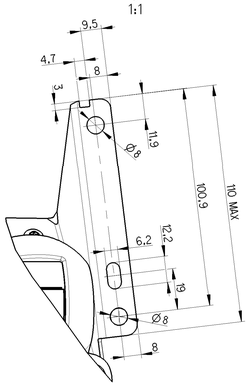

A
2:1

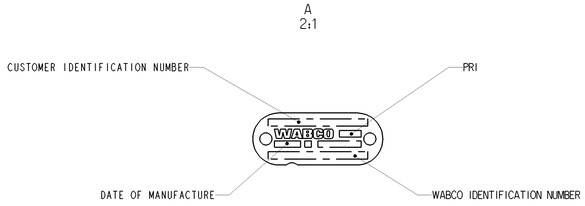

1:2

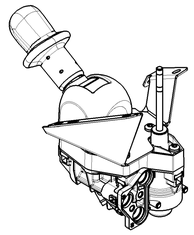

General Specification: JED-334-1 , Size ISO 14405 LP					
Further Technical Data:					
Doc. Code:		Sheet:		To	
General Tolerances JED-261					
	Range of Nominal Dimensions (in mm)				
Class 1)	≤ 50	> 50 ≤ 180	> 180 ≤ 400	> 400	
Fine	0.5	1.0	1.5	2.0	
Medium	1.0	2.0	3.0	4.0	±3°
Coarse	X 2.0	3.5	5.0	6.5	
Tapped Holes acc.					
1) Tolerance Class Applied Crossmarked					

Copyright WABCO®

Date	Signature	
Drawn 2017-11-16	Kolkowski	
Checked 2017-12-01	Liszkwan	
Expert Przybysz		
Mass 0.8 kg	Scale 1:1 (1x2, 2x1)	
Size A 0	CAD System CREO	

WABCO

HAND BRAKE UNIT (RIGHT)

Material No.	Date of first issue: 2016-12-07		
961 724 225 0	Doc.Code 005	Language EN	Sheet 1/1

EOI-No.	Revision	Techn. Resp.	Replacement for
175536	2x B	5212..AM	

Tale documento ne rimane di proprietà. Tale riproduzione o comunicazione a terzi anche parziale, non ammessa, salvo autorizzazione espressa. Tal documento è stato redatto sulla base delle informazioni a noi fornite e pertanto non possiamo garantirne la completezza e la rispondenza alle Vostre esigenze specifiche. Qualsiasi modifica, integrazione o correzione da Voi ritenuta necessaria, potrà essere da Voi richiesta. Il documento potrà essere ritirato o modificato da parte nostra in qualsiasi momento senza preavviso. Il documento potrà essere da Voi utilizzato per la realizzazione di quanto richiesto, salvo diversi accordi scritti. Il documento potrà essere da Voi esibito a terzi solo per ragioni inerenti a tale richiesta. Qualsiasi altra forma di utilizzo, diffusione, riproduzione, comunicazione, cessione, copia, anche parziale, sono vietate.
This document belongs to us. Any reproduction or disclosure to third parties, even in part, is not allowed without our express consent. This document is based on the information we have received from you and therefore we do not guarantee its completeness and compliance with your specific requirements. Any modification, integration or correction you deem necessary, may be requested by you. We reserve the right to withdraw or modify the document at any time without prior notice. The document may be used by you for the purpose of carrying out the requested activity, unless otherwise agreed in writing. You may not disclose it to third parties except for that purpose. Any other form of use, dissemination, reproduction, communication, transfer, in whole or in part, is prohibited.