(B)	<1> SAFETY CHARACTERISTICS	1
	<2> SIGNIFICANT CHARACTERISTICS	0
	<I> CUSTOMER INTERFACE	0

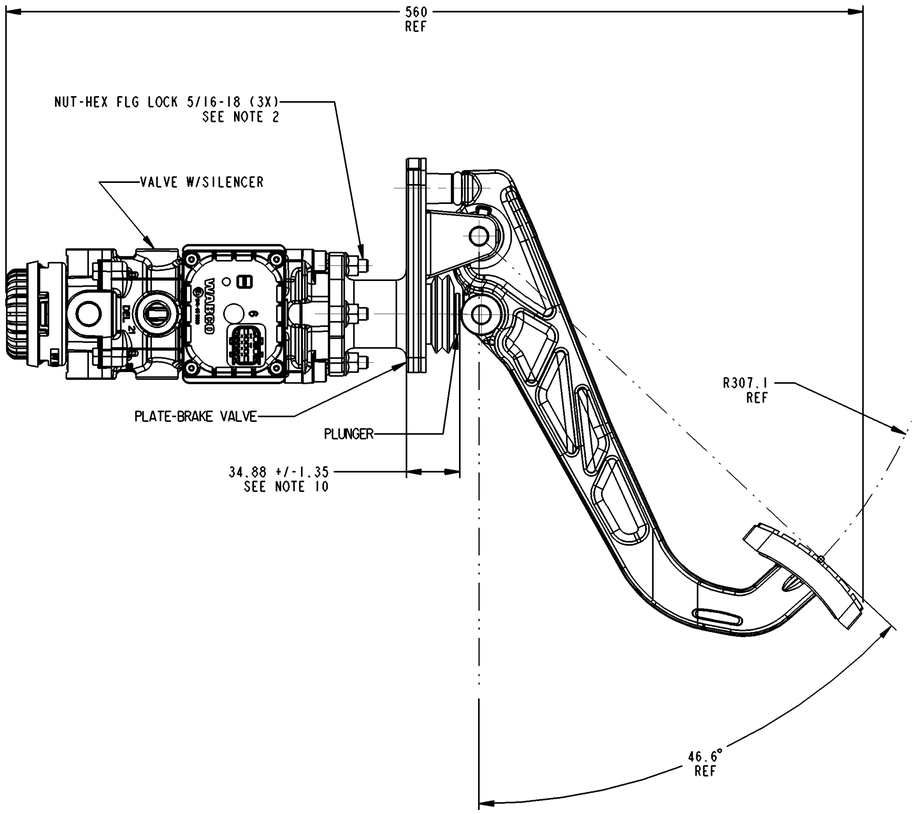

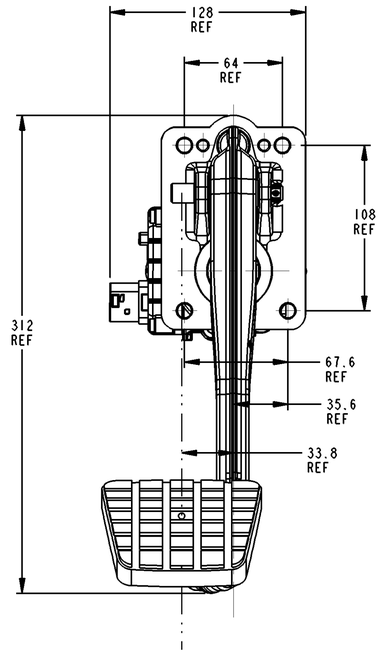

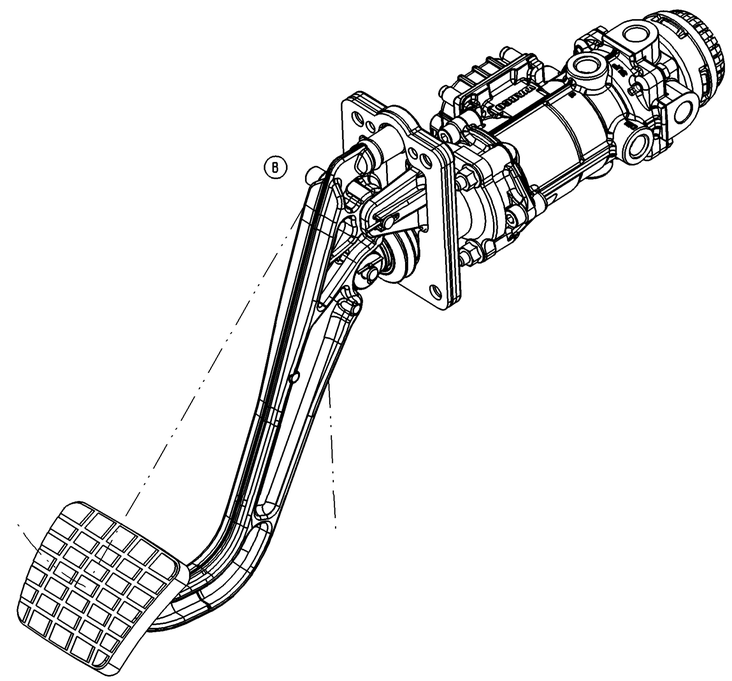

NOTES:

1. IDENTIFIY COMPONENT PER DTNA SPECIFICATION 49-00051.
2. <I> TORQUE TO 10-13 FT-LB AND MARK IN PLACE WITH TORQUE SEAL, AS PER DTNA REQUIREMENTS.
3. ENSURE BUMPER (ITEM 6) HEAD IS PRESSED FLUSH WITH THE ADAPTER FACE (ITEM 2).
4. LUBRICATE WITH SYNTHETIC GREASE (ITEM 15). APPLY TO INSIDE BORE OF ITEM 2 AND OD OF ITEM 7.
5. GASKET IS ASSEMBLED TO FWD FACE OF CASTING. REMOVE WAX RELEASE PAPER BEFORE LOCATING IN PLACE.
6. INSERT ROD (ITEM 4) FROM THIS SIDE ONLY.
7. ENGAGE SLOTTED SPRING PIN (ITEM 5) FULLY ON BOTH FACES OF 'V' CASTING. MARK WITH TORQUE SEAL TO VERIFY.
8. ASSEMBLY TO MEET REQUIREMENTS OF DTNA SPECIFICATION 49-00056-000.
9. OPTIONAL EQUIVILENT VENDOR ROD-PIN BW 200981 MAY BE USED FOR ITEM 4.
10. CONSTRAIN THE VALVE VERTICALLY WITH THE PEDAL ARM ORIENTED UPWARDS. WITH THE PEDAL ARM RESTING ON THE PLUNGER, MEASURE THE DISTANCE BETWEEN THE PLUNGER AND THE EDGE OF THE MOUNTING SURFACE ON THE PLATE-BRAKE VALVE. REPEAT THE MEASUREMENT WITH THE PEDAL ARM LIFTED OFF THE PLUNGER. BOTH VALUES OF THE TWO MEASUREMENTS SHALL BE 34.88 ±1.35MM.
11. LUBRICATE WITH SYNTHETIC GREASE (ITEM 15) APPLY TO ITEM 14 BEFORE INSERTING IT THRU THE ROLLERS AND PEDAL.
12. EACH LEG OF COTTER PIN (ITEM 13) MUST BE BENT AS SHOWN (90° INCLUDED ANGLE). MARK WITH TORQUE SEAL TO VERIFY.
13. TO FACILITATE ASSEMBLY, PEDAL COVER MAY BE LUBRICATED WITH A 5% SOLUTION OF MILD SOAPY WATER.
14. WABCO PN: 9618992340 SAME AS DTNA PN: WAB9618992340.

THIRD ANGLE PROJECTION

General Specification: JED-334-1 , Size ISO 14405 LP					
Further Technical Data:					
Doc. Code:		Sheet:		To	
General Tolerances JED-261					
	Range of Nominal Dimensions (± mm)				
Class 1)	≤ 50	> 50 ≤ 180	> 180 ≤ 400	> 400	
Fine	0.5	1.0	1.5	2.0	±3°
Medium	1.0	2.0	3.0	4.0	
Coarse	2.0	3.5	5.0	6.5	
Topped Holes acc.					
1) Tolerance Class Applied Crossmarked					

Copyright WABCO®

Date	Signature
Drawn	
2021-03-02	Sutton
Checked	
2021-03-09	Paoletti
Expert	
-	

WABCO

PEDAL ASSY W/BRAKE VALVE & SILENCER

Mass	Scale	Material No.	Date of first issue: 2016-09-20		
3.25 kg	0.5	961 899 234 0	Doc.Code	Language	Sheet
			005	EN	1/1
Size	CAD System				
A 1	CREO				

EDM-No.	Revision	Techn. Resp.	Replacement for
507435	2 B	5180_MW	-

100mm

Tout Communication ou reproduction de ce document, toute exploitation ou communication de son contenu sont interdites, sauf autorisation. Tous droits de propriété industrielle réservés, notamment en matière de brevets et de modèles.

Weitergabe sowie Vervielfältigung dieser Unterlage, Verwertung und Mitteilung ihres Inhalts nicht gestattet, soweit nicht ausdrücklich zugestanden. Zuwiderhandlungen verpflichten zu Schadenersatz. Alle Rechte für den Fall der Patenterteilung oder Gebrauchsmustereintragung vorbehalten.

Non è permesso consegnare a terzi o riprodurre questo documento, né utilizzare il contenuto o renderlo comunque noto a terzi senza autorizzazione. Ogni violazione obbliga al risarcimento dei danni. Si riserva il diritto di depositare un brevetto, di registrare un modello di utilità o un disegno o modello.

Copying of this document and giving it to others and the use or communication of the contents thereof, are forbidden without express authority. Offenders are liable to the payment of damages. All rights are reserved in the event of the grant of patent or registration of a utility model or design. This document is the subject of copyright.