PEDALIER AVEC ROBINET DE FREIN NON LIMITE
INTEGRATED PEDAL UNIT (IPU) WITH NON LIMITED BRAKE VALVE

CARACTERISTIQUES EMETTEUR A VIDE
MASTER CYLINDER CHARACTERISTICS WITHOUT OIL

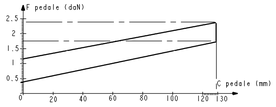

[3]<2> CARACTERISTIQUES ROBINET DE FREIN
BRAKE VALVE CHARACTERISTICS

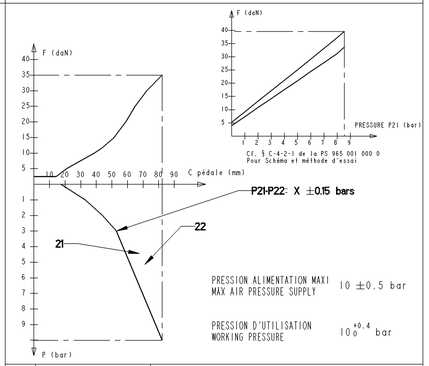

X	VARIANTE PEDALIER IPU VARIANT	VARIANTE ROBINET DE FREIN BRAKE VALVE VARIANT
0.3	965 001 021 0	461 494 532 2

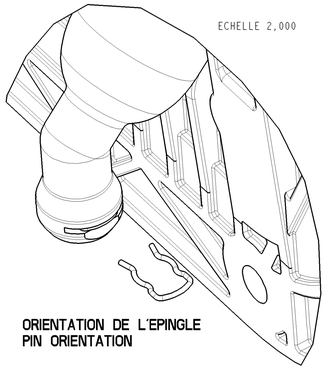

ORIENTATION DE L'EPINGLE
PIN ORIENTATION

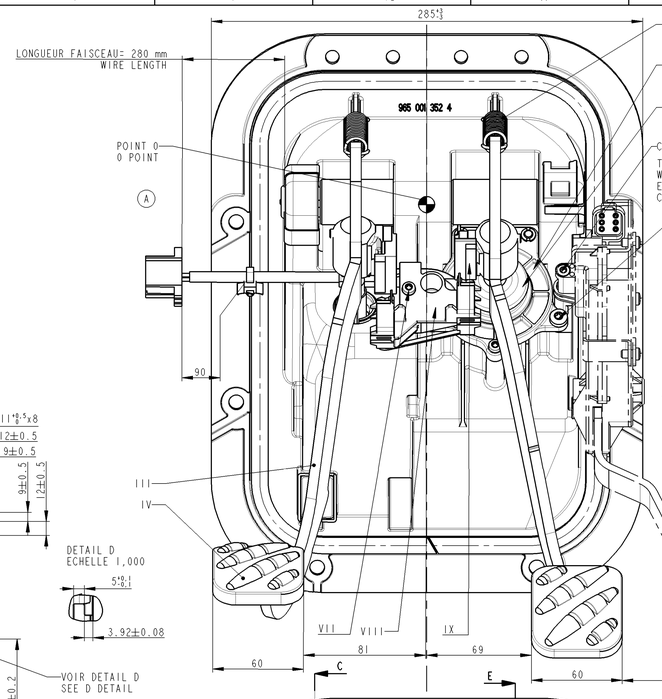

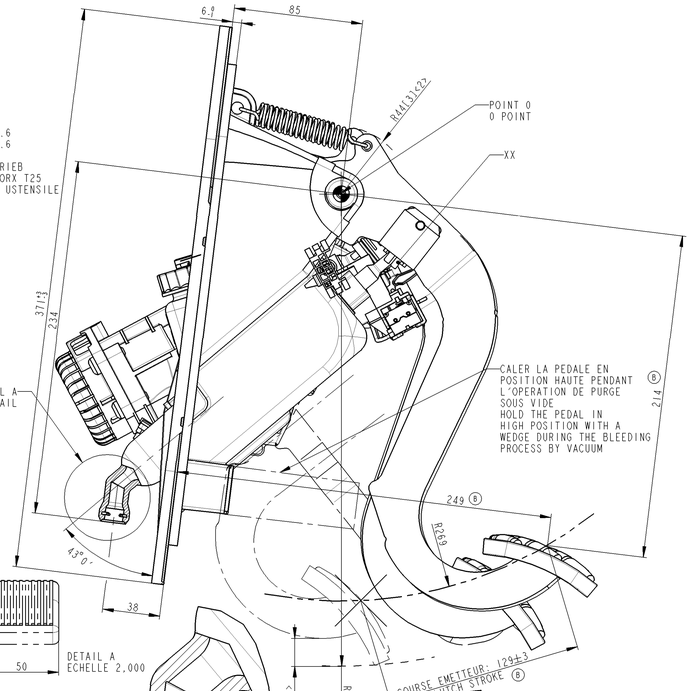

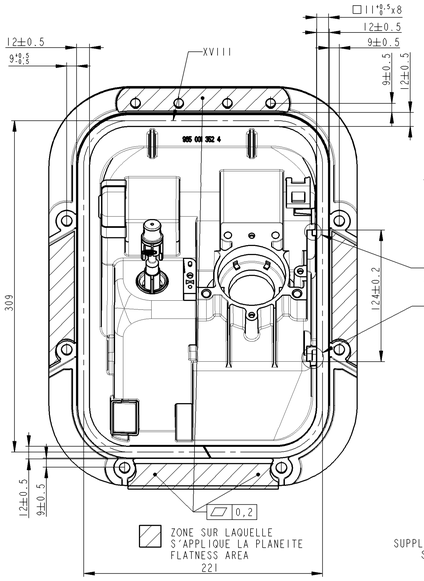

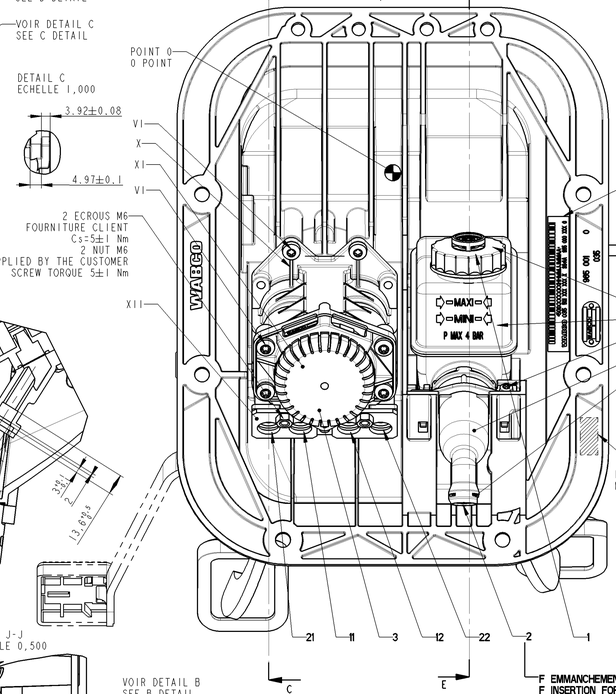

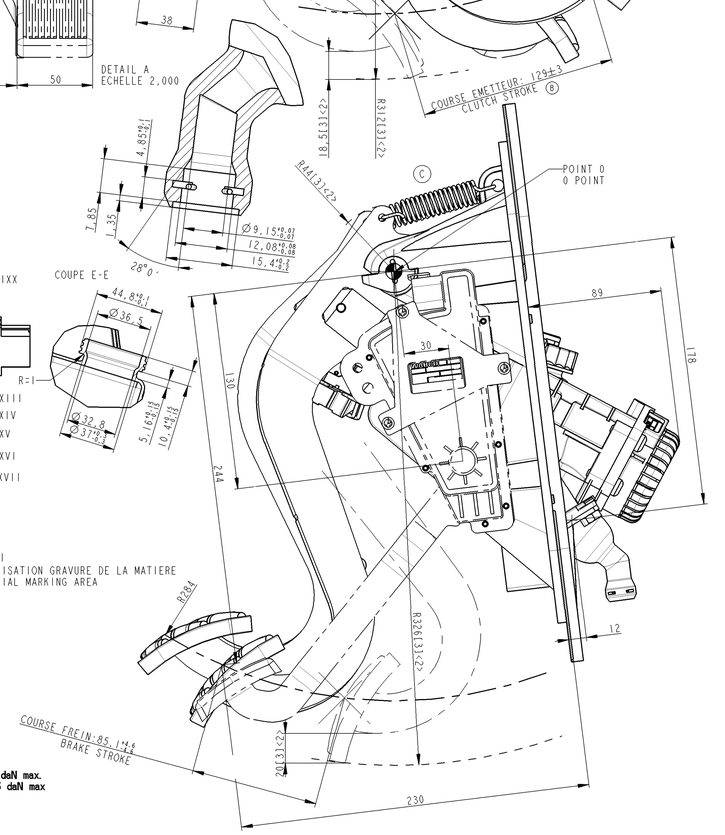

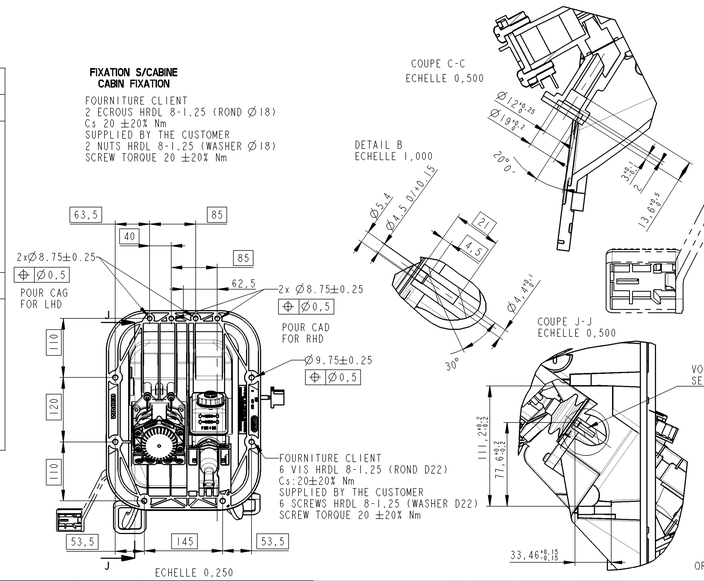

REPERE ITEM	MATIERE MATERIAL	[3]<2> SURFACE DE PROTECTION SURFACE PROTECTION
I	PA6T/6I G50	
II	JED-049-M/Fe	BEZINAL
III	E420 /Fe	JED-240-2
IV	CAOUTCHOUC	
V	JED-487-2/EPDM	
VI	JED-051-M4/Fe	JED-378
VII	JED-733-6/Fe	
VIII	JED-534-3/PA6-6	
IX	JED-005-M3/POM	
X	JED-004-M/Z	JED-260
XI	JED-534-1/PA6-6	
XII	JED-682/PPS	
XIII	PP	
XIV	PPK 40-32	
XV	JED-534-1/PA6-6	
XVI	PAA	
XVII	JED-049-M/Fe	JED-232-5
XVIII	CR	
IXX	POLYESTHER	
XX	PA 4.6	

SYMBOLES ISO 1219

FREIN
BRAKE

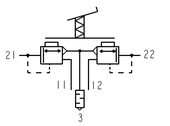

EMETTEUR
MASTER CYLINDER

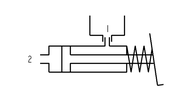

CARACTERISTIQUES COMMUNES
COMMON CHARACTERISTICS

THERMAL RANGE THERM ANWENDUNGSBEREICH TEMPERATURE D'UTILISATION TEMPERATURA DI UTILZZAZIONE	+80°C -40°C
FIRE STANDARD - NORME FEU -	FMV SS302
WORKING POSITION EINBAUKAGE POSITION DE FONCTIONNEMENT POZITIONE DI FUNZIOAMENTO	
COORDONNEES POINT 0 0 POINT COORDINATES X -915 Z +429 Y -700 CAG H +700 CAD H -600 CAG M +600 CAD M	

ECHELLE 0,250

Connector FCI 8 pins
ref: RT94PH08VL*T Purple
Connecteur FCI 8 voies
ref: RT94PH08VL*T Violet

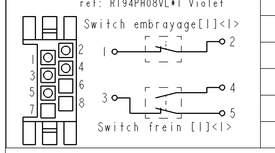

N° COSSE PIN NUMBER	COULEUR FIL WIRE COLOR	FONCTION FUNCTION
1	NOIR BLACK	COM EMBRAYAGE
2	GRIS GREY	NC EMBRAYAGE
3	MARRON BROWN	COM FREIN
4	ROUGE RED	NO FREIN
5	JAUNE YELLOW	NC FREIN

CARACTERISTIQUES DE L'EMETTEUR
MASTER CYLINDER CHARACTERISTICS

	MARKING OF PORTS KENNZEICHNUNG DER ANSCHLUESSE MARQUAGE DES ORIFICES MARCATURA DEGLI ORIFIZI	USABLE HYDRAULIC VOLUME NUTZBARES HYDRAULIKVOLUMEN VOLUME HYDRAULIQUE UTILE CILINDRATA UTILE	SEE PS 965 001 000 0 - VOIR PS 965 001 000 0 -
P2	DELIVERED HYDRAULIC PRESSURE AUSGESTEUERTER HYDRAULKDRUCK PRESSION HYDRAULIQUE DELIVREE PRESSIONE IDRAULICO LIBERATA	SEE PS 965 001 000 0 - VOIR PS 965 001 000 0 -	
1	OIL INLET OELZUFLUSS ALIMENTATION HUILE ALIMENTATION OLIO		
2	DELIVERY AUSGESTEUERTE UTILISATION UTILIZZAZIONE	HYDRAULIC FLUID HYDRAULIKFLUESSIGKEIT FLUIDE HYDRAULIQUE FLUIDO IDRAULICO	DOT 4 (BASED BRAKE FLUID) SAE J1703

CARACTERISTIQUES DU FREIN
BRAKE VALVE CHARACTERISTICS

	MARKING OF PORTS KENNZEICHNUNG DER ANSCHLUESSE MARQUAGE DES ORIFICES MARCATURA DEGLI ORIFIZI		
11 12	AIR INLET AIR ZUFLUSS ALIMENTATION EN AIR ALIMENTATION AIR	SEE PS 965 001 000 0 - VOIR PS 965 001 000 0 -	
21 22	DELIVERY AUSGESTEUERTE UTILISATION UTILIZZAZIONE		
3	ESCAPE OF AIR LUFTAUSTRITT ECHAPPEMENT SCARICA D'ARIA	INTEGRATED SILENCER GERAEUSCHDAEMPFER SILENCIEUX INTEGRE SILENZIATORE	NOISE REDUCTION (FOR P21/22= 8 bar) : 72 dB(A) - REDUCTION DE BRUIT (POUR P21/22 = 8 bar) : 72 dB(A) -

12x( ) SPECIAL CHARACTERISTICS
CARACTERISTIQUES SPECIALES

PRODUCT OF SAFETY AND/OR SUBJECTED A REGLEMENTATION
PRODUIT DE SECURITE ET OU SOUMIS A REGLEMENTATION

General Specification: JED-334-0		Copyright WABCO®	WABCO
Further Technical Data: -		Date / Signature	
Doc. Code:	Sheet: / To:	Drawn: 2011-06-22 Rossard	PEDAL UNIT PEDALEINHEIT PEDALIER PEDALIERA
General Tolerances JED-261		Checked: 2011-06-29 Osman	
Range of Nominal Dimensions (in mm)		Expert:	
Class 1) ≤ 50 / > 50 ≤ 180 / > 180 ≤ 400 / > 400		Mass: 0,700	Scale:
Fine 0.5 / 1.0 / 1.5 / 2.0		Material No.: 965 001 021 0	Date of first issue: 2007-03-09
Medium 1.0 / 2.0 / 3.0 / 4.0	±3°	Doc. Code: 005	Language: ML
Coarse 2.0 / 3.5 / 5.0 / 6.5		Sheet: 1/1	
Tapped Holes acc.: JED-750		Size: A 0	CAD System: Pro/E
1) Tolerance Class Applied Crossmarked		EDM No.: 152880	Revision: tx C
		Techn. Resp.: 5190	Responsible for: 8841 618 630 0

100mm