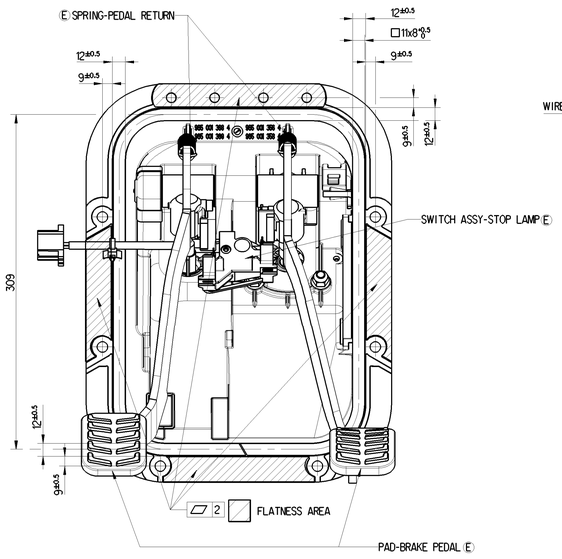

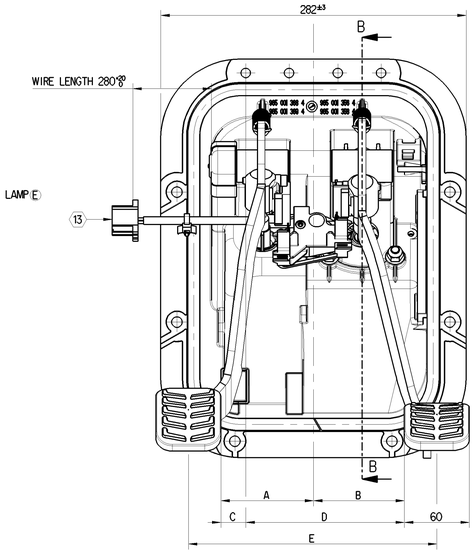

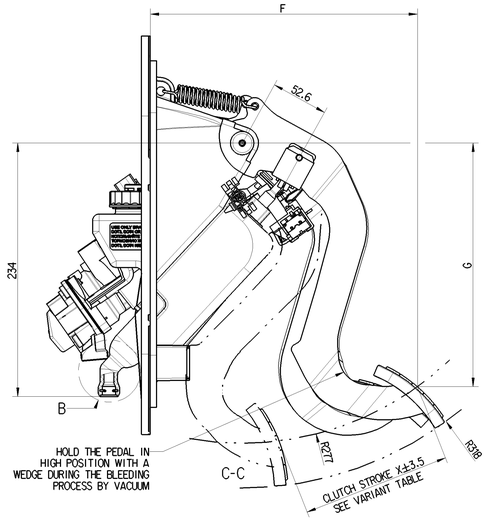

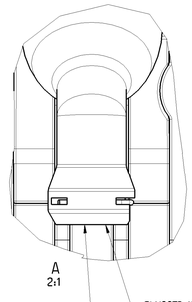

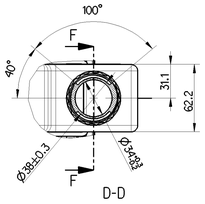

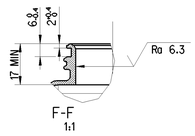

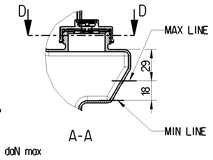

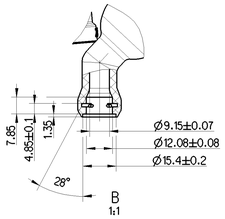

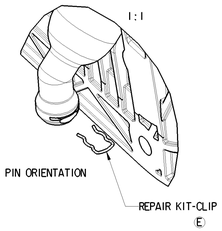

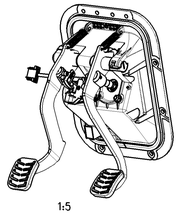

WORKING POSITION

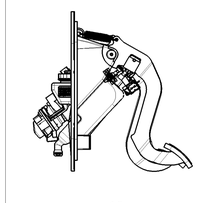

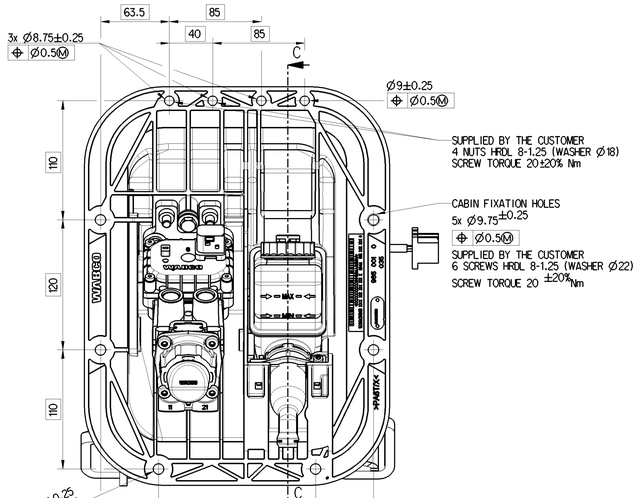

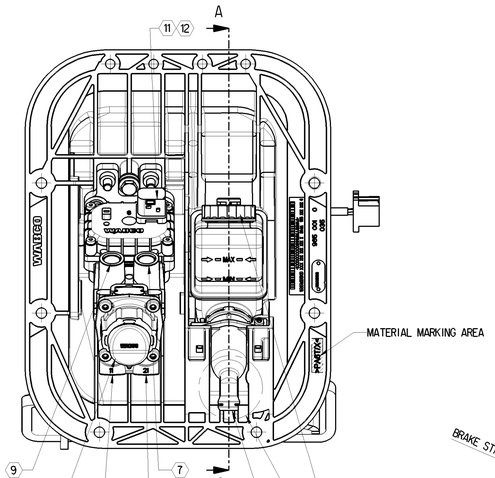

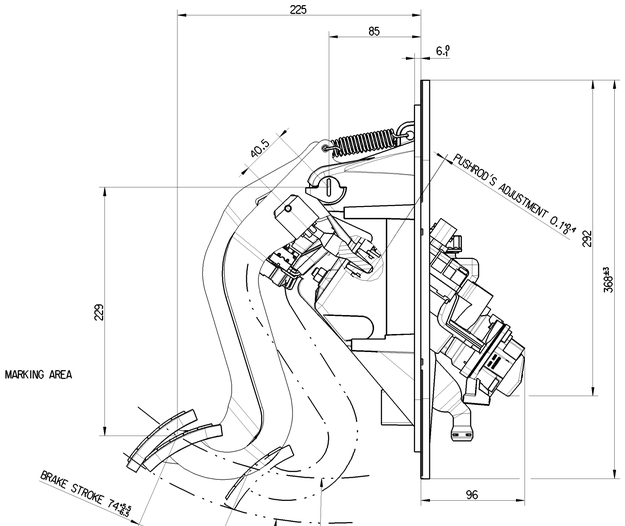

12 TYCO-INTERFACE DRAWING

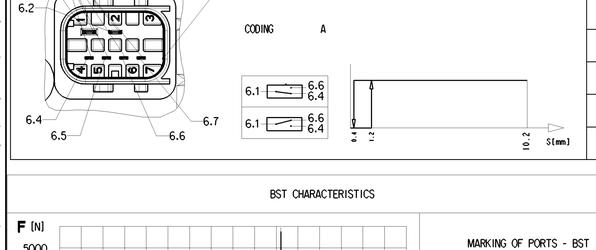

PIN NUMBER	FUNCTION	
6.2	+ (U_B = 24±0.2V)	
6.1	GROUND 0V	
6.4/6.6	SWITCH1/SWITCH2	
6.5	I*	Fz=198 Hz
6.7	I*	Fz=202 Hz

VARIANT TABLE

VARIANT DESCRIPTION		DIMENSION VALUE							
WABCO PART NUMBER	LHD/RHD	CLUTCH STROKE "X"	"A"	"B"	"C"	"D"	"E"	"F"	"G"
965 001 284 0	LHD	127	85.5	84	23	146.5	229.5	238	231
965 001 285 0	LHD	137	85.5	84	23	146.5	229.5	247	225
965 001 290 0	RHD	127	108	67	45.5	129.5	235	238	231
965 001 291 0	RHD	137	108	67	45.5	129.5	235	247	225

BST CHARACTERISTICS

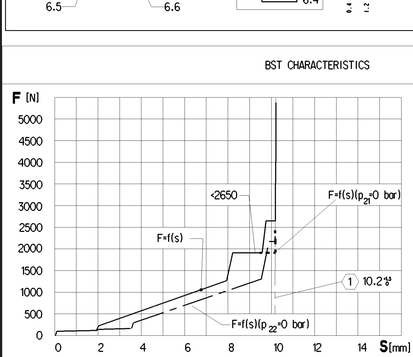

1 STOP WITHIN THE DEVICE ADMISSIBLE

MARKING OF PORTS - BST

SEE PS 480 003 067 0

6	11	AIR INLET
7	12	
8	21	DELIVERY
9	22	
10	3	EXHAUST
11	6	ELECTRICAL BRAKE SIGNAL

COMMON CHARACTERISTICS

THERMAL RANGE	+80°C -40°C
FIRE STANDARD	FMV SS302
BST	TIGHTENING TORQUE 20±4 Nm

13 Connector FCI 8 pins ref: RT94PH08VL*T Purple

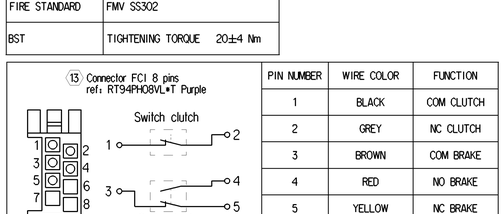

PIN NUMBER	WIRE COLOR	FUNCTION
1	BLACK	COM CLUTCH
2	GREY	NC CLUTCH
3	BROWN	COM BRAKE
4	RED	NO BRAKE
5	YELLOW	NC BRAKE

INTEGRATED PEDAL UNIT WITH BST & CLUTCH SYSTEM

SYMBOL	MASTER CYLINDER CHARACTERISTICS WITHOUT OIL	MARKING OF PORTS		USABLE HYDRAULIC VOLUME	SEE PS 965 001 285 0
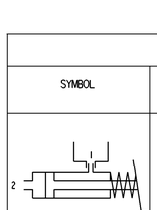	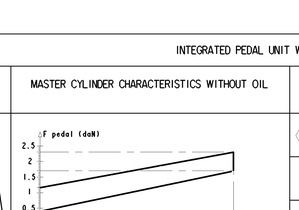	4 1	OIL INLET		
		P2	DELIVERED HYDRAULIC PRESSURE	SEE PS 965 001 285 0	
		5 2	DELIVERY	HYDRAULIC FLUID	DOT 4 (BASED BRAKE FLUID) SAE J1703

CUSTOMER NO SHOWN HERE

PRI CODE SHOWN HERE

DATE OF MANUFACTURE SHOWN HERE

DATA CODING (IF REQUIRED) SHOWN HERE

WABCO IDENTIFICATION NUMBER SHOWN HERE

OPTIONAL

2:1
NAME PLATE DETAILS

2 EACH PEDAL TO BE OPERATED INDEPENDENTLY WITHOUT AFFECTING EACH OTHER

3 HYDRAULIC DIA. OF MASTER CYLINDER : Ø26.125

General Specification: JED 334-1 ; Size ISO 14405 LP			
Further Technical Data: Product Specification 965001293O			
Doc. Code: 035	Sheet: 1	To: 11	
General Tolerances JED-261			
	Range of Nominal Dimensions (in mm)		
Class 11	> 50 ≤ 180	> 180 ≤ 400	> 400
Fine	0.5	1.0	1.5	2.0	±3°
Medium	1.0	2.0	3.0	4.0	
Coarse X	2.0	3.5	5.0	6.5	
Tapped Holes acc.					
11 Tolerance Class Applied Crosmarked					

Copyright WABCO®

Date	Sign.	Name
2021-08-23		Czerwinski
2021-08-23		Kozłowski

Checked

Legal
Treło

WABCO

PEDAL UNIT

Mass KG	Scale	Material No.	Date of first issue 2019-02-19
6	1:2 (1:5,1:1,2:1)	965 001 293 0	Doc.Code 053 / Language EN / Sheet 1/1
Size A 0	Ad. System CREO	ECN No. 508132 / Revision 4x E / Techn. Repl. 5190	Replacement for 884 059 176 0

100mm