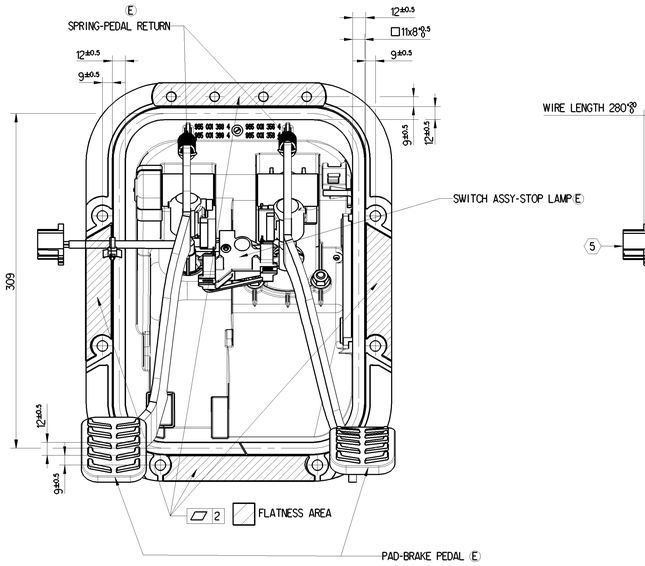

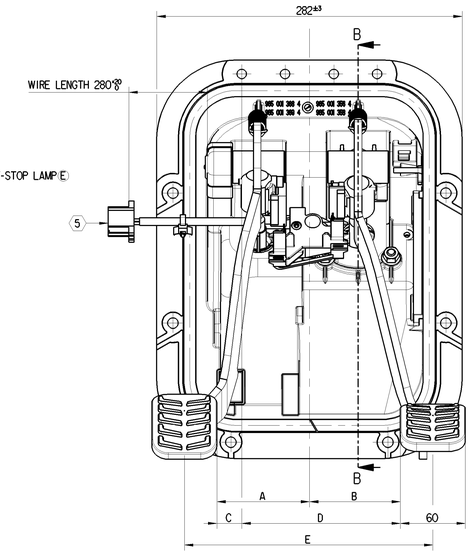

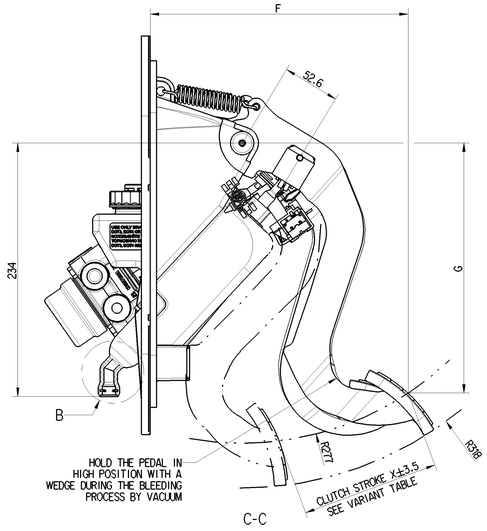

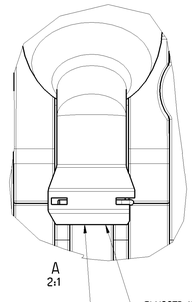

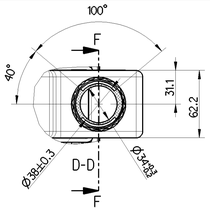

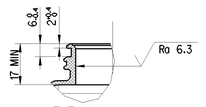

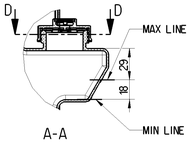

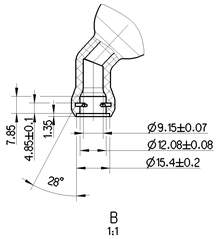

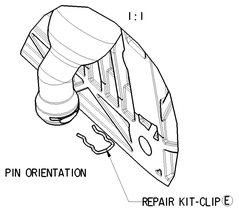

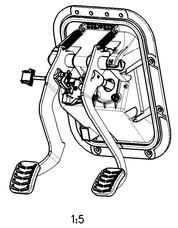

WORKING POSITION

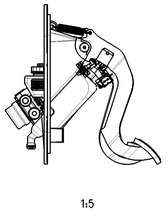

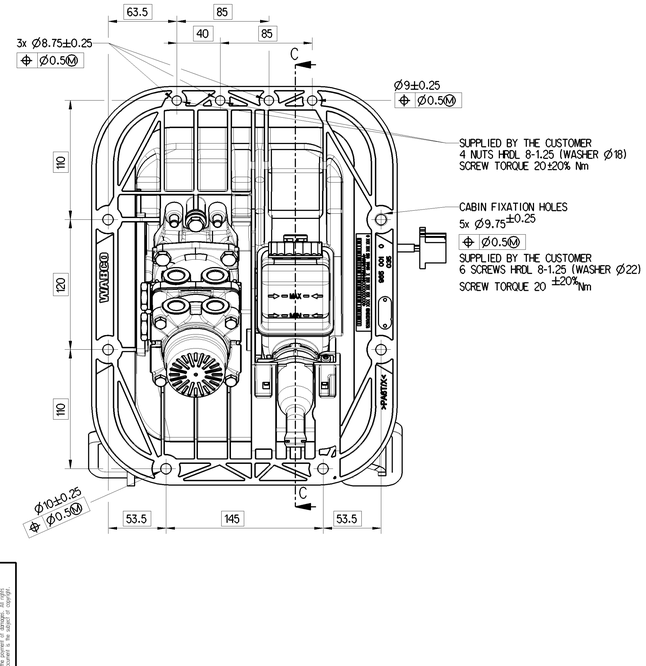

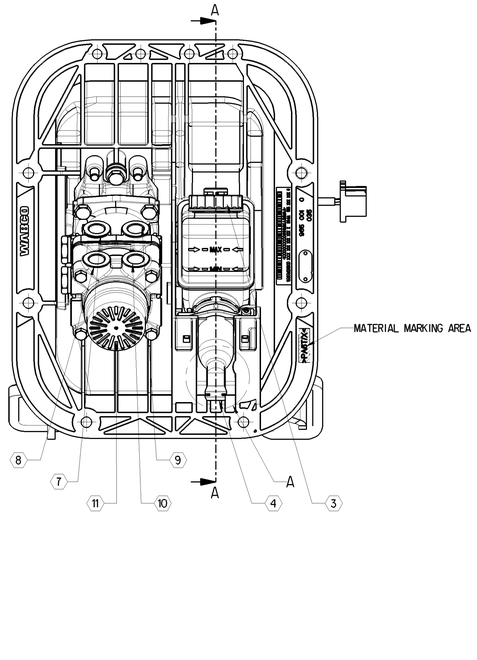

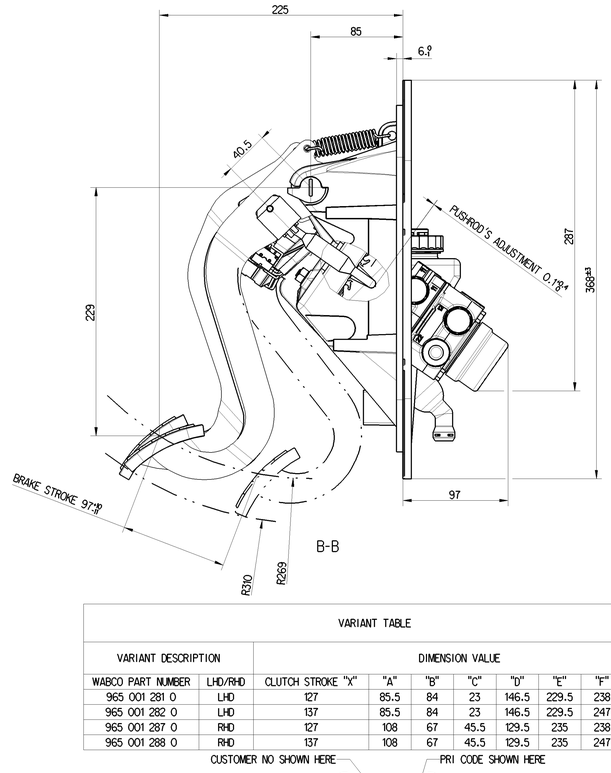

VARIANT TABLE									
VARIANT DESCRIPTION		DIMENSION VALUE							
WABCO PART NUMBER	LHD/RHD	CLUTCH STROKE "X"	"A"	"B"	"C"	"D"	"E"	"F"	"G"
965 001 281 0	LHD	127	85.5	84	23	146.5	229.5	238	231
965 001 282 0	LHD	137	85.5	84	23	146.5	229.5	247	225
965 001 287 0	RHD	127	108	67	45.5	129.5	235	238	231
965 001 288 0	RHD	137	108	67	45.5	129.5	235	247	225

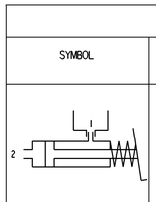

2:1
NAME PLATE DETAILS

(1) EACH PEDAL TO BE OPERATED INDEPENDENTLY WITHOUT AFFECTING EACH OTHER

(2) HYDRAULIC DIA. OF MASTER CYLINDER : Ø26.125

FBV CHARACTERISTICS

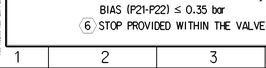

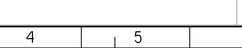

AT FAILURE OF CIRCUIT 1 { NECESSARY TRAVEL S ≥ 14 mm FOR P22 = P12 / NECESSARY FORCE F = 3900 N }

BIAS (P21-P22) ≤ 0.35 bar

(6) STOP PROVIDED WITHIN THE VALVE

MARKING OF PORTS - FBV

SEE PS 461 100 121 0

(7)	11	AIR INLET
(8)	12	
(9)	21	DELIVERY
(10)	22	
(11)	3	EXHAUST

COMMON CHARACTERISTICS	
THERMAL RANGE	+80 °C -40 °C
FIRE STANDARD	FMV SS302
FBV	TIGHTENING TORQUE 20±4 Nm

(5) Connector FCI 8 pins
ref: RT94PH08VL•T Purple

PIN NUMBER	WIRE COLOR	FUNCTION
1	BLACK	COM CLUTCH
2	GREY	NC CLUTCH
3	BROWN	COM BRAKE
4	RED	NO BRAKE
5	YELLOW	NC BRAKE

INTEGRATED PEDAL UNIT WITH FBV & CLUTCH SYSTEM

SYMBOL	MASTER CYLINDER CHARACTERISTICS WITHOUT OIL	MARKING OF PORTS		USABLE HYDRAULIC VOLUME	SEE PS 965 001 281 0
		(3) 1	OIL INLET		
		P2	DELIVERED HYDRAULIC PRESSURE	SEE PS 965 001 281 0	
		(4) 2	DELIVERY	HYDRAULIC FLUID	DOT 4 (BASED BRAKE FLUID) SAE J1703

General Specification: JED-334-1 , Size ISO 14405 LP
Further Technical Data: Product Specification 965001293O
Doc. Code: 035 Sheet: 1 To 11

General Tolerances JED-261

Class 11)	Range of Nominal Dimensions (in mm)				
	≥ 0.5	> 50 ≤ 180	> 180 ≤ 400	> 400	
Fine	0.5	1.0	1.5	2.0	
Medium	1.0	2.0	3.0	4.0	±3°
Coarse	X 2.0	3.5	5.0	6.5	

Tapped Holes acc.
11 Tolerance Class Applied Crosswarked

Copyright WABCO®

Date	Signature	
Drawn 2021-08-23	Czerwinski	
Checked 2021-08-23	Kozłowski	
Count Trela		

WABCO

PEDAL UNIT

Mass kg	Scale	Material No.	Date of first issue 2019-02-19
6	1:2 (1:5,1:1,2:1)	965 001 295 0	Doc.Code 053 / Language EN / Sheet 1/1
Size A 0	Doc. System CREO	ECN No. 508132 / Revision 4x E / Techn. Resp. 5190	Replacement for 884 059 174 0

100mm

This document is confidential, is as delivered, is not modifiable, is unprotectable, is not entry-level benefits, and contains no trade secrets. Its contents may not be copied, used, or disclosed to anyone not authorized in writing by WABCO or its affiliates. Violators will be held liable for damages and profits. Copyright © 2021 WABCO. All rights reserved.
Ce document est confidentiel, est livré, ne peut être modifié, ne peut être protégé, ne contient pas de secrets commerciaux. Son contenu ne peut être copié, utilisé ou divulgué à quiconque non autorisé par écrit par WABCO ou ses affiliées. Les contrevenants seront tenus pour responsables des dommages et des profits. Copyright © 2021 WABCO. Tous droits réservés.
Este documento es confidencial, es tal como se entrega, no puede modificarse, no puede protegerse, no contiene secretos comerciales. Su contenido no puede copiarse, utilizarse o divulgarse a nadie que no esté autorizado por escrito por WABCO o sus filiales. Los infractores serán responsables de los daños y perjuicios. Copyright © 2021 WABCO. Todos los derechos reservados.