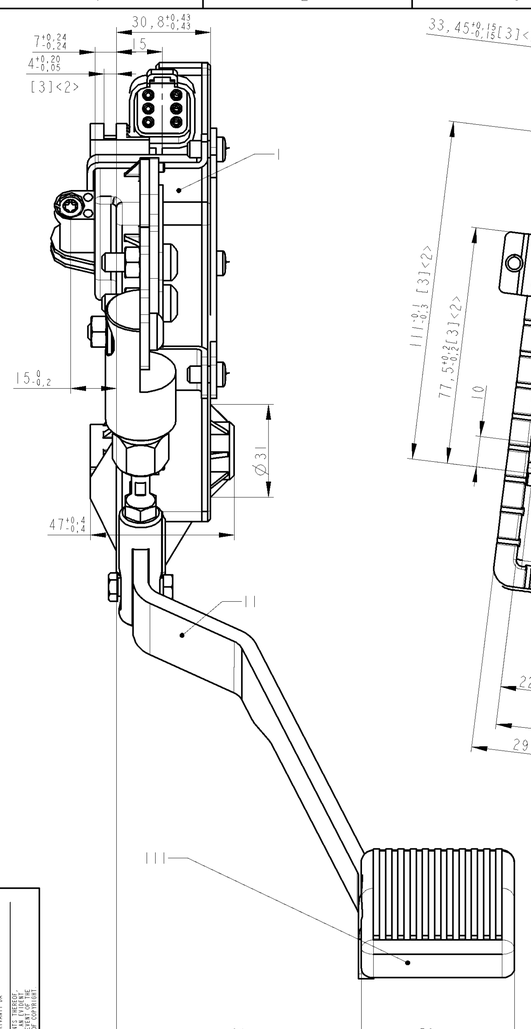

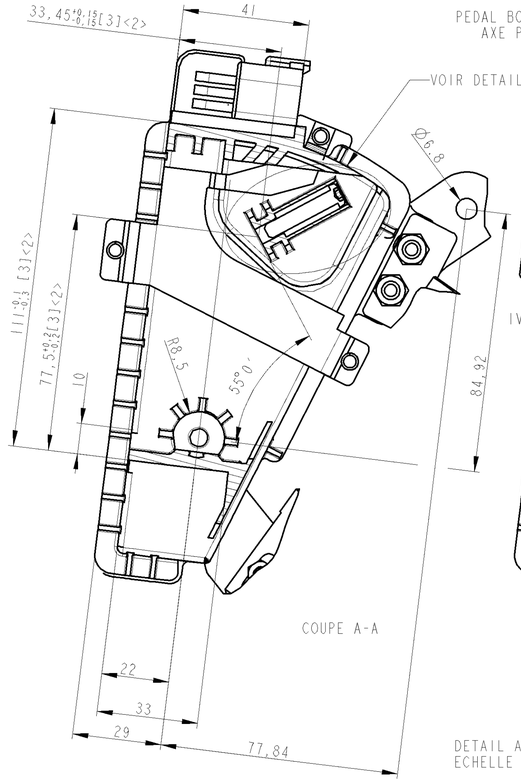

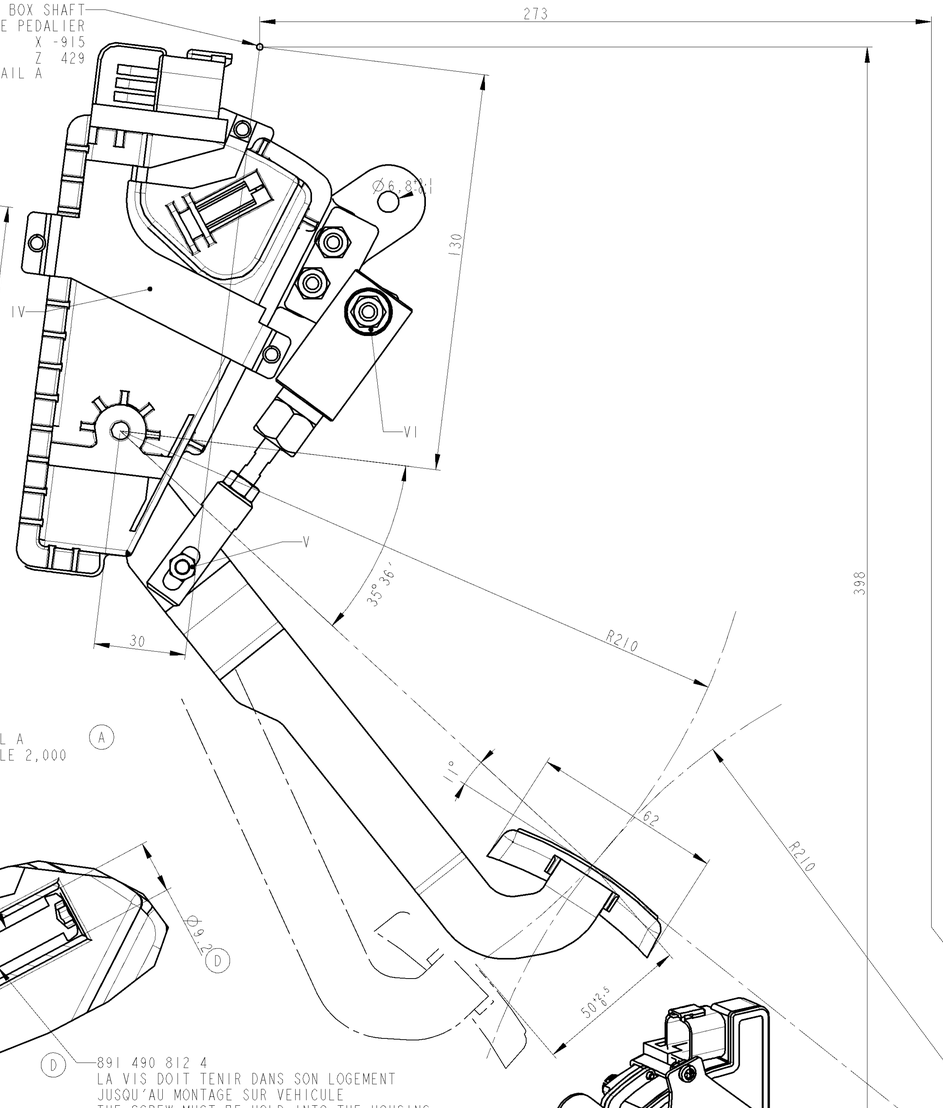

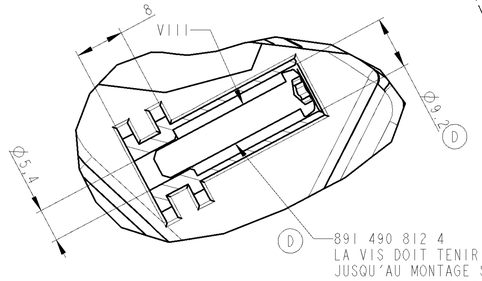

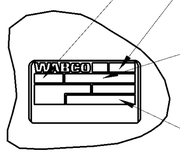

ECHELLE 1,000

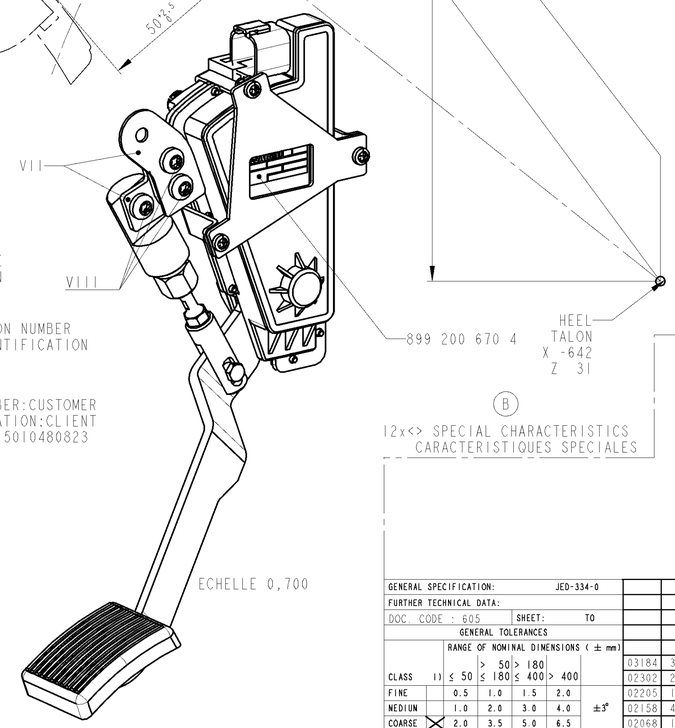

12x<> SPECIAL CHARACTERISTICS
CARACTERISTIQUES SPECIALES

ECHELLE 0,700

SPECIFICATION
SENSOR

E= SUPPLY VOLTAGE
[1]<1> V SPAN = 60% mini

[1]<1> V SWITCH = (3% TO 10% OF V SPAN) + V IDLE

APPLICATION PARAMETERS :

PEDAL TRAVEL = 13.1° (FROM V IDLE TO V MAX)

SENSOR WILL MEET THE CUMMINS SPECIFICATION. ELECTRICAL VALUES MARKED WITH AN ASTERISK (*) ARE GIVEN FOR REFERENCE ONLY.

ELECTRICAL - POTENTIOMETER

[1]<1>	TOTAL RESISTANCE	2.5 k ohms±15% AT 20°C ±10°C
[1]<1>	* INDEX POINT (IDLE POSN.)	8% AT 0° ±3%
[1]<1>	* WIDE OPEN THROTTLE	80% ±3%
	* OUTPUT GRADIENT	5.5478 ±0.2783% FOR 11.5° STROKE
	LINEARITY (INDEPENDENT)	±2% OVER 5% TO 85% OF OUTPUT
	POWER RATING	0.15 WATTS A 85°C DERATED TO ZERO AT 105°C
	TEMPERATURE COEFFICIENT	±600 ppm/°C
	INSULATION RESISTANCE	1000 M ohms min., 500 V DC
	MAXIMUM VOLTAGE	13.5V DC

B ELECTRICAL - SWITCHES

	SWITCH VALUE IVS	13.7% ±2.7% E
[1]<1>	SWITCH STATE AT IDLE	IVS CLOSED
	SWITCH SERIES RESISTANCE	1.3 KΩ ±15%
	SWITCH PARALLEL RESISTANCE	31.7 KΩ ±15%
	MAX CONTINUOUS CURRENT	20 mA
	MAXIMAL VOLTAGE	32VDC

MECHANICAL

[2]<2>	ROTATION	13.1° +0.5 -0.16
	FMVSS124	

ENVIRONMENTAL TESTS

RELEVANT SEALING SPECIFICATIONS ARE VALID ONLY WHERE APPROPRIATELY SEALED ELECTRICAL CONNECTORS ARE FITTED

	REPERE ITEM	MATIERE MATERIAL	SURFACE DE PROTECTION SURFACE PROTECTION
	I	PA 6/6 GF 30	-
	II	QSTE 500TM	FeZn black 8/12 m
	III	PP	-
	IV	JED 624	-
	V	JED 626.1	black Zinc Nickel without CR VI
B	VI	JED 051 M4	JED 378
	VII	JED 021 M1	black Zinc Nickel without CR VI
B	VIII	JED 051 M4	JED 378

ELECTRICAL SCHEMATIC
(DRAWN AT IDLE)

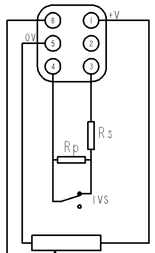

DEUTSCH DRAWING
CAVITY DT 06 6S

C GRAPH OF NOMINAL ELECTRICAL OUTPUT AT PIN 6 AND NOMINAL SWITCH POSITION [1]<1>

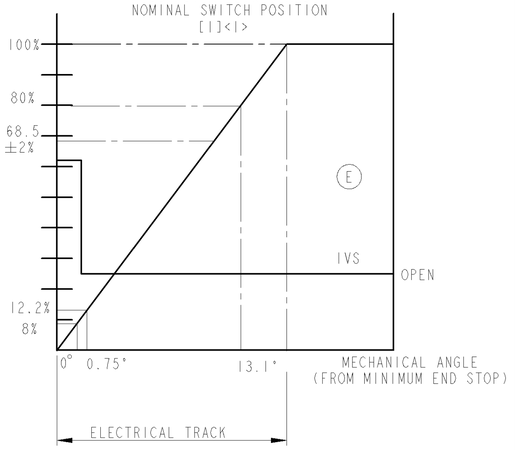

THERMAL RANGE TEMPERATURE D'UTILISATION	+80°C -40°C

GENERAL SPECIFICATION:	JED-334-0
FURTHER TECHNICAL DATA:	
DOC. CODE : 605	SHEET: TO

GENERAL TOLERANCES

CLASS 1)	RANGE OF NOMINAL DIMENSIONS (± mm) ≤ 50	> 50 ≤ 180	> 180 ≤ 400	> 400	
FINE	0.5	1.0	1.5	2.0	
NEDIUM	1.0	2.0	3.0	4.0	±3°
COARSE	2.0	3.5	5.0	6.5	

TAPPED HOLES ACC. ISO 4039 / JED-152

1) TOLERANCE CLASS APPLIED CROSSMARKED

DCN-NO.	REV.	DATE
03184	3xE	14/08/03
02302	2xD	01/07/02
02205	1xC	23/04/02
02158	4xB	03/04/02
02068	1xA	12/02/02
01509	-	05/01/02

Pro/ENGINEER DRAWING COPYRIGHT

	DATE	SIGNATURE
DRAWN	03-Jan-02	SACQUET
CHECKED	03-Jan-02	CAZENAVE
EXPERT CODE		

WABCO

ACCELERATOR PEDAL EURO 3.1
GASPEDAL EURO 3.1
ACCLERATEUR EURO 3.1 TRANSITOIRE
PEDALE DELL'ACCELERATORE EURO 3.1

MASS	SCALE	PRODUCT IDENTIFICATION NO.	DOC. CODE	SHEET
0.88	1,000	965 050 006 0	605	1/1

SIZE	TRI	FUNCTION CODE	SHAPE CODE	PRODUCT TYPE	REPLACEMENT FOR
A1	E 41			0,000	

160mm

TOUTE COMMUNICATION OU REPRODUCTION DE CE DOCUMENT, TOUTE EXPLOITATION OU COMMUNICATION DE SON CONTENU NE SONT PAS AUTORISÉES SAUF AUTORISATION ÉCRITE. TOUTES MESURES SONT RÉSERVÉES À L'ÉTAT ÉGALEMENT EN CAS DE DÉPOT DE BREVET.

NON È PERMESSO CONCEDERE A TERZI O RIPRODURRE QUESTO DOCUMENTO, NE UTILIZZARE IL CONTENUTO O RENDERLO COMUNQUE NOTO A TERZI. SALVO AUTORIZZAZIONE SCRITTA. OGNI ENTITÀ DEL COSTITUENTE È TUTELATA CON DEPOSITO DI BREVETTO.

TODO EL PERSONAL DE WABCO QUE TENGA ACCESO A ESTE DOCUMENTO ESTÁ OBLIGADO A CUMPLIR LAS DISPOSICIONES LEGALES VIGENTES SOBRE PROTECCIÓN DE DATOS PERSONALES, ASÍ COMO A MANTENER EN SECRETO LA INFORMACIÓN OBTENIDA.

WITHOUT WABCO'S PRIOR WRITTEN CONSENT, THIS DOCUMENT MUST NOT BE REPRODUCED OR DISCLOSED TO OTHERS AND THE USE OR COMMUNICATION OF THE CONTENTS THEREOF ARE FORBIDDEN. ALL RIGHTS ARE RESERVED IN THE EVENT OF THE GRANTING OF A PATENT OR REGISTRATION OF A UTILITY MODEL OR DESIGN.

DIESES DOKUMENT DARF OHNE VORHERIGE SCHRIFTLICHE ZUSTIMMUNG WEDER VERVIELFÄLTIGT NOCH DRITTEN ZUGÄNGLICH GEMACHT WERDEN. DIE VERWENDUNG UND MITTEILUNG IHRES INHALTS NICHT GESTATTET, SOWEIT NICHT AUSDRÜCKLICH ZugESTANDEN. FÜR ERTEILUNG VON PATENT ODER EINTRAGUNG EINES GebRAUCHSMUSTERS ODER GESCHMACKSMUSTERS VORBEHALTEN.

Drw. 965050060.605

7M41 965050060