DEVICE EXTREME POSITIONS WHEN BLEEDING
MAX. SCHIEFSTAND DES GERAETES WAEHREND DER ENTLUEFTUNG
POSITIONS EXTREMES DE L'APPAREIL PENDANT LA PURGE
POSIZIONI ESTREME DELL'APPARECCHIO DURANTE LO SPURGO

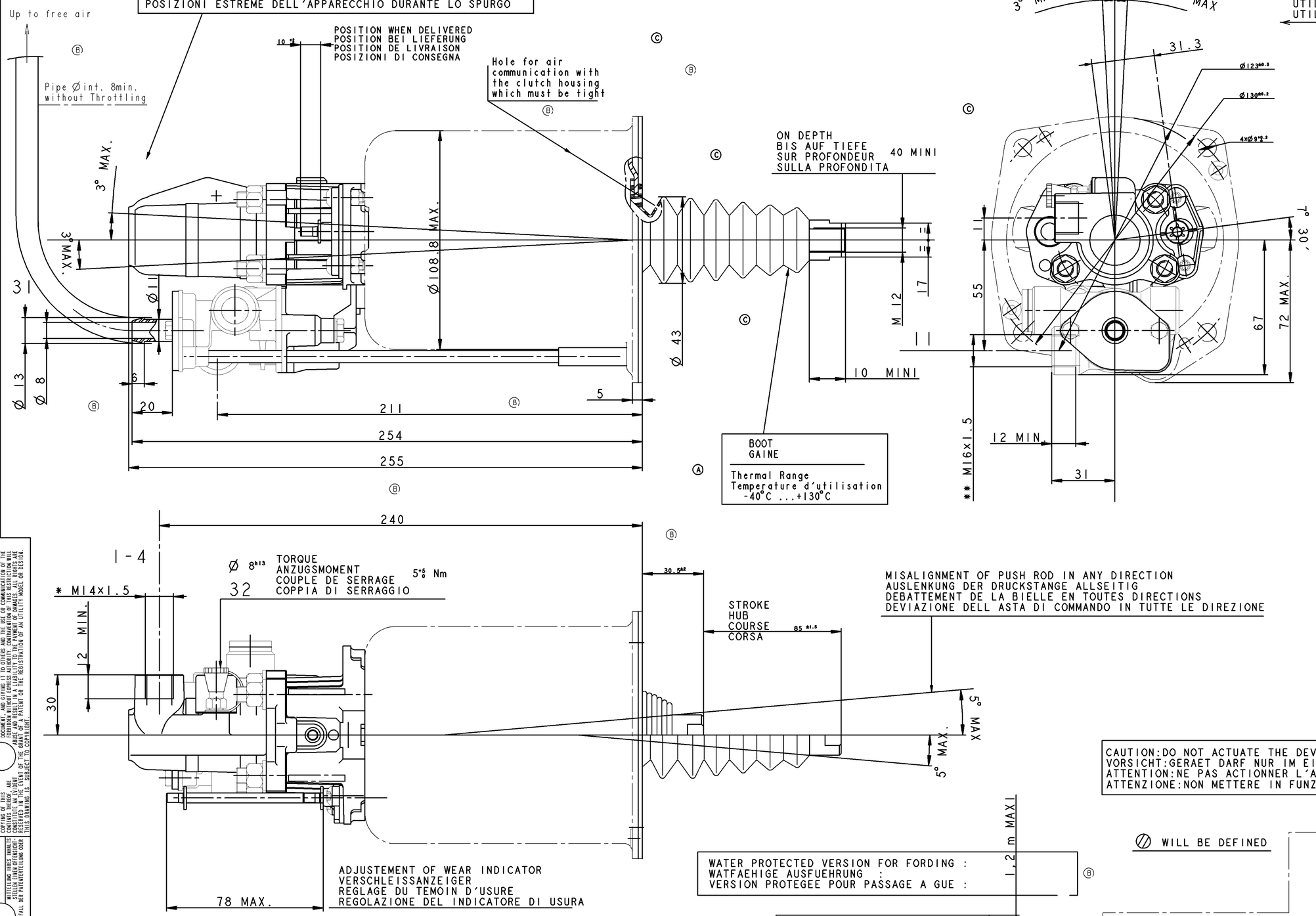

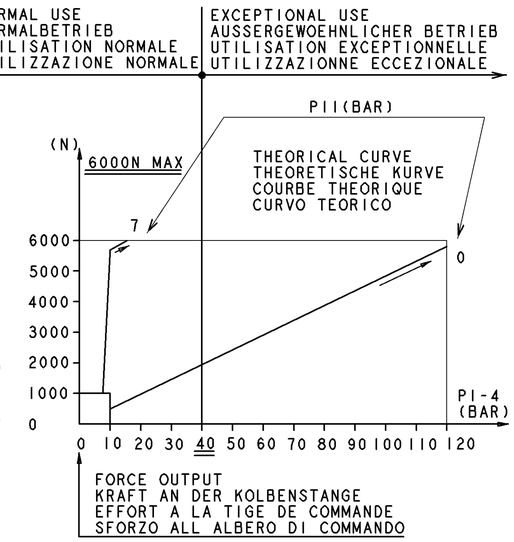

OIL VOLUME INPUT NUTZBARES HYDRAULISCHES VOLUMEN VOLUME D'HUILE ABSORBE VOLUME D'OLIO ASSORBITO			V=(SHxC)+K
K	ABSORPTION AT AUFNAHME BEI ABSORPTION A ASSORBIMENTO A	120 BAR FOR FUER POUR PER C=0	1.5<K<2.5 cm³
SH	HYDRAULIC SECTIONAL AREA HYDRAULISCHER QUERSCHNITT SECTION HYDRAULIQUE SEZIONE IDRAULICO		4.89 cm²
C	GEAR DISENGAGING STROKE AUSKUPPLUNGSHUB COURSE DE DEBRAYAGE CORSA DI DISINNESTO		

HYDRAULIC FLUID HYDRAULIKFLUESSIGKEIT FLUIDE HYDRAULIQUE FLUIDO IDRAULICO	BRAKE FLUID BREMSFLUESSIGKEIT GLYCERO ALCOOLIQUE LIQUIDO PER FRENI	SAE J 1703
THERMAL RANGE THERMISCHER ANWENDUNGSBEREICH TEMPERATURE D'UTILISATION TEMPERATURA DI UTILIZZAZIONE	-40°C...+100°C	
SUPPLY PRESSURE VORRATSDRUCK PRESSION PNEUMATIQUE D'ALIMENTATION PRESSIONE PNEUMATICA DI ALIMENTAZIONE	10 BAR MAX	
NO STROKE LIMITER IN THE DEVICE KEINE HUBBEGRENZUNG IM GERAET PAS DE LIMITATION DE COURSE DANS L'APPAREIL NESSUNA LIMITAZIONE DI CORSA NELL'APPARECHIO		

CAUTION:DO NOT ACTUATE THE DEVICE IF NOT FITTED ON ITS MOUNTING BRAKET
VORSICHT:GERAET DARF NUR IM EINGEBAUTEN ZUSTAND BETAETIGT WERDEN
ATTENTION:NE PAS ACTIONNER L'APPAREIL S'IL N'EST PAS FIXE SUR SON SUPPORT
ATTENZIONE:NON METTERE IN FUNZIONE L'APPARECCHIO SE NON E'FISSATO AL SUPPORTO

WILL BE DEFINED

WATER PROTECTED VERSION FOR FORDING :
WATFAEHIGE AUSFUEHRUNG :
VERSION PROTEGEE POUR PASSAGE A GUE :

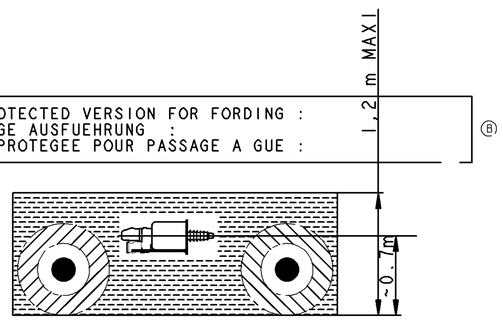

MARKING OF PORTS KENNZEICHNUNG DER ANSCHLUESSE MARQUAGE DES ORIFICES MARCATURA DEGLI ORIFIZI		21	PRESSURE CONNECTION DRUCKANSCHLUSS PRISE DE PRESSION PRESA DI PRESSIONE
11	AIR INLET VORRATSLEITUNG ALIMENTATION AIR ALIMENTAZIONE ARIA	31	AIR EXHAUST ENTLUEFTUNG ECHAPPEMENT SCARICO
1-4	OIL INLET OELZUFLUSS ALIMENTATION HUILE ALIMENTAZIONE OLIO	32	BLEED SCREW ENTLUEFTUNGSSCHRAUBE VIS DE PURGE VITE DI SPURGO

SYMBOL
SYMBOL
SYMBOLE
SIMBOLO

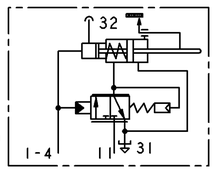

TORQUE FOR CONNECTIONS ANZUGSMOMENT FUER ANSCHLUESSE COUPLE DE SERRAGE DES RACCORDS COPPIA DI SERRAGGIO DEI RACCORDI	* 25 N.m MAX ** 34 N.m MAX

FURTHER TECHNICAL DATA SEE				L	
IDENTIFICATION NO. PRODUCT SPECIFICATION				K	
CODE FOR DOCUMENT: 605	SHEET: TO			J	
GENERAL TOLERANCES				H	
CLASS	RANGE OF NOMINAL DIMENSIONS (± mm)			G	
	>50	>180		F	
I	0,5	1,0	1,5	2,0	E
II	1,0	2,0	3,0	4,0	± 3°
III	2,0	3,5	5,0	6,5	D
TAPPED HOLES ACC. ISO 4039 / JED-152				98 140	1x A 98-05-12
(1) TOLERANCE CLASS APPLIED CROSSMARKED				DCN-NO.	REV. DATE

005/00 4x C 00-01-11
99 049 8x B 99-02-09

COPYRIGHT

DATE	SIGNATURE
DRAWN 98-02-26 HOUDAER	
CHECKED 98-02-26 L'HER	
STANDARDIZATION 98-02-27 98 060	

WABCO

CLUTCH SERVO
KUPPLUNGSVERSTAERKER
SERVO DEBRAYAGE
SERVO FRIZIONE

MASS	SCALE	PRODUCT IDENTIFICATION NO.	CODE FOR DOCUMENT	SHEET
kg	1:1	970 051 181 0	605	1/1
SIZE A1	T.R.I. 210	CODE F.PROD.-GROUP / CODE FOR SHAPE	REPLACEMENT FOR 884 616 184 0	

100mm

EXPERT CODE TYPE OF PRODUCT

TOUTE COMMUNICATION OU REPRODUCTION DE CE DOCUMENT, TOUTE EXPLOITATION OU COMMUNICATION DE SON CONTENU SONT INTERDITES, SAUF AUTORISATION ECRITE. TOUS DROITS RESERVES, NOTAMMENT EN MATIERE DE BREVETS ET DE MODELES.
WEITERGABE SOWIE VERVIELFAELTIGUNG DIESER UNTERLAGE, VERWERTUNG UND MITTEILUNG IHRES INHALTS NICHT GESTATTET, SOWEIT NICHT AUSDRUECKLICH ZugESTANDEN. ALLE RECHTE FUER DEN FALL DER PATENTERTEILUNG ODER GEBRAUCHSMUSTER-EINTRAGUNG VORBEHALTEN.
NON E' PERMESSO COMUNICARE A TERZI O RIPRODURRE QUESTO DOCUMENTO, NE UTILIZZARE I CONTENUTI O RENDERLI NOTI, SALVO AUTORIZZAZIONE SCRITTA. TUTTI I DIRITTI SONO RISERVATI, IN PARTICOLARE IL DIRITTO DI BREVETTO O DI MODELLO DI COMODO.
COPYING OF THIS DOCUMENT AND GIVING IT TO OTHERS AND THE USE OR COMMUNICATION OF THE CONTENTS THEREOF, ARE FORBIDDEN WITHOUT EXPRESS AUTHORITY. COPYRIGHT OF THIS RESTRICTION WILL BE ASSERTED IN THE EVENT OF THE GRANT OF A PATENT OR THE REGISTRATION OF AN UTILITY MODEL OR DESIGN RESERVED.
THIS DRAWING IS SUBJECT TO COPYRIGHT.

86-01