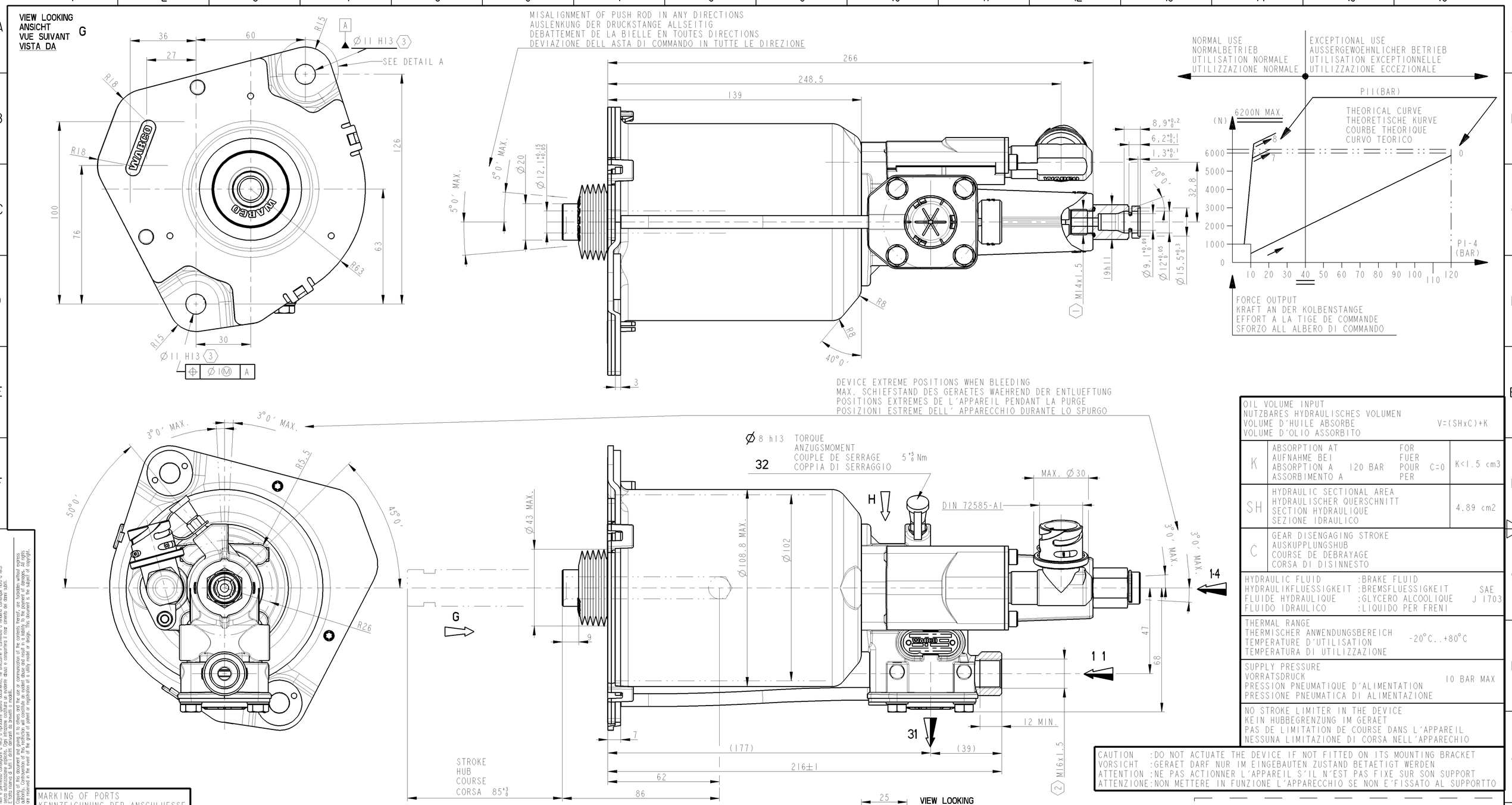

OIL VOLUME INPUT
NUTZBARES HYDRAULISCHES VOLUMEN
VOLUME D'HUILE ABSORBE
VOLUME D'OLIO ASSORBITO
V=(SHxC)+K

K	ABSORPTION AT / AUFNAHME BEI / ABSORPTION A / ASSORBIMENTO A 120 BAR	FOR / FUER / POUR / PER C=0	K<1.5 cm3
SH	HYDRAULIC SECTIONAL AREA / HYDRAULISCHER QUERSCHNITT / SECTION HYDRAULIQUE / SEZIONE IDRAULICO		4.89 cm2
C	GEAR DISENGAGING STROKE / AUSKUPPLUNGSHUB / COURSE DE DEBRAYAGE / CORSA DI DISINNESTO		

HYDRAULIC FLUID / HYDRAULIKFLUESSIGKEIT / FLUIDE HYDRAULIQUE / FLUIDO IDRAULICO	:BRAKE FLUID / :BREMSFLUESSIGKEIT / :GLYCERO ALCOOLIQUE / :LIQUIDO PER FRENI	SAE J 1703
THERMAL RANGE / THERMISCHER ANWENDUNGSBEREICH / TEMPERATURE D'UTILISATION / TEMPERATURA DI UTILIZZAZIONE	-20°C..+80°C	
SUPPLY PRESSURE / VORRATSDRUCK / PRESSION PNEUMATIQUE D'ALIMENTATION / PRESSIONE PNEUMATICA DI ALIMENTAZIONE	10 BAR MAX	
NO STROKE LIMITER IN THE DEVICE / KEIN HUBBEGRENZUNG IM GERAET / PAS DE LIMITATION DE COURSE DANS L'APPAREIL / NESSUNA LIMITAZIONE DI CORSA NELL'APPARECHIO		

CAUTION :DO NOT ACTUATE THE DEVICE IF NOT FITTED ON ITS MOUNTING BRACKET
VORSICHT :GERAET DARF NUR IM EINGEBAUTEN ZUSTAND BETAETIGT WERDEN
ATTENTION :NE PAS ACTIONNER L'APPAREIL S'IL N'EST PAS FIXE SUR SON SUPPORT
ATTENZIONE:NON METTERE IN FUNZIONE L'APPARECCHIO SE NON E'FISSATO AL SUPPORTTO

MARKING OF PORTS
KENNZEICHNUNG DER ANSCHLUESSE
MARQUAGE DES ORIFICES
MARCATURA DEGLI ORIFIZI

11	AIR INLET / VORRATSLEITUNG / ALIMENTATION AIR / ALIMENTAZIONE ARIA	31	AIR EXHAUST / ENTLUEFTUNG / ECHAPPEMENT / SCARICO
1-4	OIL INLET / OELZUFLUSS / ALIMENTATION HUILE / ALIMENTAZIONE OLIO	32	BLEED SCREW / ENTLUEFTUNGSSCHRAUBE / VIS DE PURGE / VITE DI SPURGO

TORQUE FOR CONNECTIONS
ANZUGSMOMENT FUER ANSCHLUESSE
COUPLE DE SERRAGE DES RACCORDS
COPPIA DI SERRAGGIO DEI RACCORDI
1 25 N.m MAX.
2 40 N.m MAX.
3 39 +3/-3 N.m

LENGTH OF CABLE BETWEEN SENSOR AND ELECTRONICS / KABELLANGE ZWISCHEN SENSOR UND ELEKTRONIC / LONGUEUR DE CABLE ENTRE CAPTEUR ET ELECTRONIQUE / LUGHEZZA DEL CAVO TRA SENSORE E CENTRALINA ELETTRONICA	10m MAX.
SUPPLY VOLTAGE / SPEISESPANNUNG / TENSION D'ALIMENTATION / TENSION D'ALIMENTAZZIONE	PULSE / IMPULS / IMPULSION / IMPULO 8 ....16V DC
PRECISION AFTER CALIBRATION / GENAUIGKEIT NACH KALIBRIERUNG / PRECISION APRES CALIBRAGE / PRECISIONE DOPO CALIBRATURA	± 5 % FULL SCALE

MEASURING PRINCIPLE / MESSPRINZIP / PRINCIPE DE MESURE / PRINCIPIO DI MISURA	INDUCTIVE / INDUKTIV / INDUCTIF / INDUTTIVO
OHMIC RESISTANCE / OHMSCHER WIDERSTAND / RESISTANCE OHMIQUE / RISISTANZA OHMICO	72 Ω ± 5 %
CURRENT CONSUMPTION / STROMAUFNAHME / CONSOMMATION DE COURANT / ASSORBIMENTO DI CORRENTE	90mA MAX.

General Specification: ISO 8015, JED-334-1, Size ISO 14405 LP
Further Technical Data: 970 051 405 0
Doc. Code: 035 Sheet: 1 To 4

General Tolerances JED-261

Class 1)	Range of nominal dimensions in mm ≤ 50	> 50 ≤ 180	> 180 ≤ 400	> 400	∡
Fine	±0.5	±1	±1.5	±2	
Medium	X ±1	±2	±3	±4	±3°
Coarse	±2	±3.5	±5	±6.5	

Tapped Holes acc. ISO 4039 / JED-152
1) Tolerance Class Applied Crossmarked

Copyright ZF®

Date	Signature
Drawn 2023-02-16	Sachin
Checked 2023-02-17	A R

Dimensions in mm

CLUTCH-SERVO

Mass	Scale	Material No.	Date of first issue: 2000-06-14		
3 kg	1:1	970 051 431 0	Doc.Code 005	Language ML	Sheet 1/2
Size A 1	CAD System CREO				

EDM-No.	Revision	Techn. Resp.	Replacement for
504967	1x H	5630	884 613 400 0

100mm

Tale documento è proprietà esclusiva di ZF. Non copiare, utilizzare o rivelare a terzi il contenuto di questo documento, se non autorizzati per iscritto. È fatto divieto di tutti i diritti derivanti da brevetti o modelli.
Copying of this document and giving it to others and the use or communication of the contents thereof, are forbidden without express authority. Offenders are liable to the payment of damages. All rights created by patent or registration of a utility model or design. This document is the subject of copyright.
Alle Rechte für den Fall der Patenterteilung oder Gebrauchsmustereintragung vorbehalten. Weitergabe sowie Vervielfältigung dieser Unterlage, Verwertung und Mitteilung ihres Inhalts nicht gestattet, soweit nicht ausdrücklich zugesichert. Zuwiderhandlungen verpflichten zu Schadensersatz.
Toute Communication ou reproduction de ce document, toute exploitation ou communication de son contenu sont interdites, sauf autorisation expresse. Tous droits de propriété industrielle réservés, notamment en matière de brevets et de modèles.
Vietato riprodurre o comunicare a terzi il presente documento, utilizzare o rivelarne ad altri il contenuto, se non autorizzati per iscritto. È fatto riserva di tutti i diritti derivanti da brevetti o modelli.

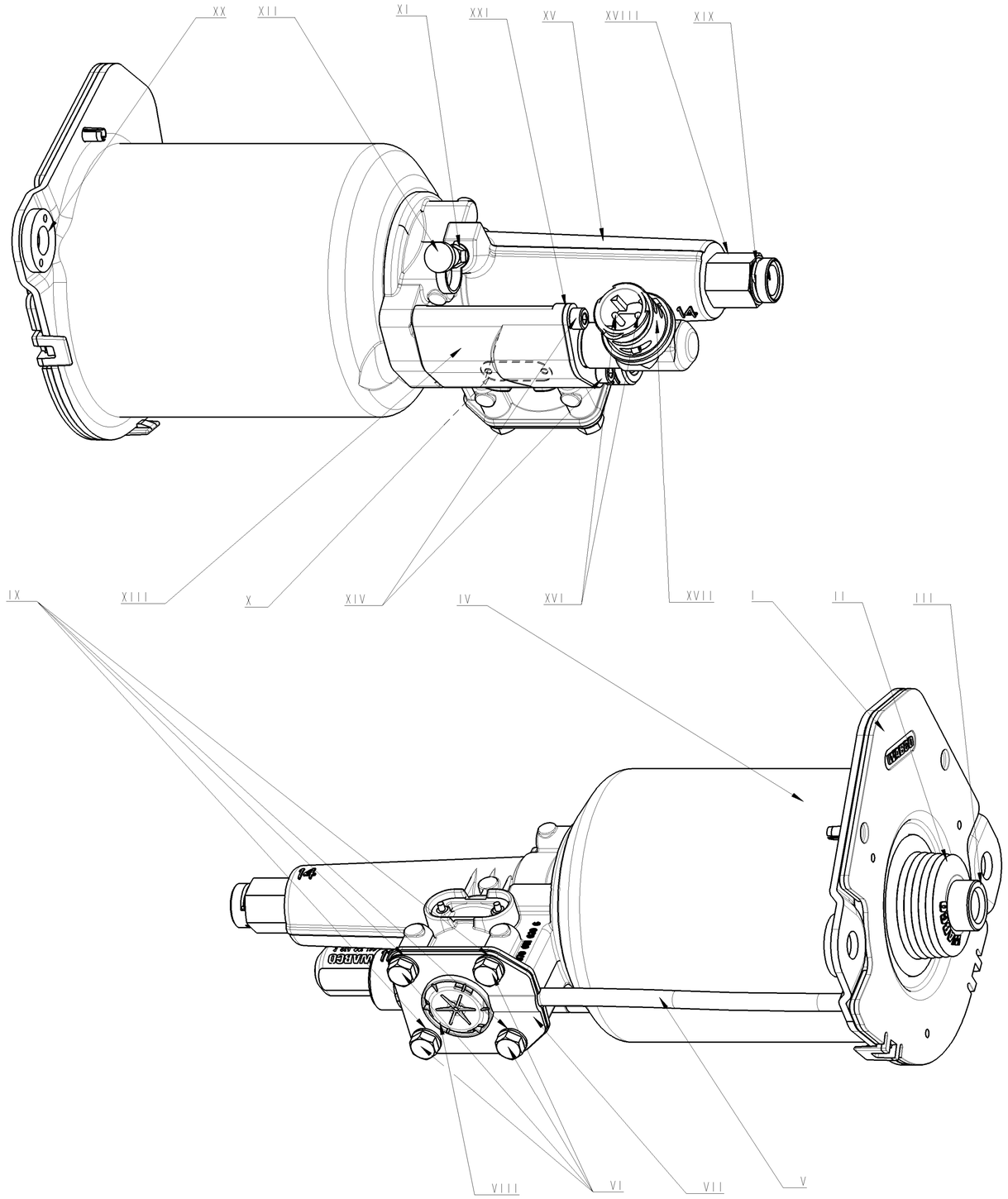

POS.	MATERIAL MATERIAL MATIERE (JED-502) MATERIALE	SURFACE PROTECTION OBERFLAECHENSCHUTZ PROTECTION DE SURFACE PROTEZIONE SUPERFICIALE (JED-502)
I	PBT - JED-462-3	-
II	EPDM - JED-376-4	-
III	Steel - JED-020-I	Zn JED-256
IV	Steel - JED-021M3	Cataphoretic coating JED-240-5
V	PA12	BLACK - NOIR
VI	Steel CL8-8 JED-051M4	Zn-Al JED-378
VII	Steel - JED-021MI	Zn JED-256
VIII	PA6.6, 30% GF - JED-534-2	BLACK - NOIR
IX	Steel - JED-048MI	Zn-Al JED-378
X	Al - JED-077-I	Anodic oxydation - JED-007-I
XI	Steel - JED-020M	Zn JED-256
XII	TPE - JED-670	-
XIII	Al-Si - JED-029MI	Chromating of Al-alloys JED-259-I
XIV	Steel - JED-051M4	Zn JED-256
XV	Al-Si - JED-029MI	Chromating of Al-alloys JED-259-I
XVI	Cu-zn JED-570-885	Ag JED-570-665
XVII	PA6.6, GF	BLACK - NOIR
XVIII	Steel - JED-020-I	WHITE-BLANC Zn (without CR6) JED-256-4
XIX	Steel - JED-049M	Plastic coating JED-232-5
XX	Steel - JED-021M3	Cataphoretic coating JED-240-5
XXI	Steel - JED-021MI	Zn JED-256

General Specification: ISO 8015, JED-334-1, Size ISO 14405 LP
Further Technical Data: 970 051 405 0
Doc. Code: 035 Sheet: 1 To 4

General Tolerances JED-261

Class 1)	Range of nominal dimensions in mm ≤ 50	> 50 ≤ 180	> 180 ≤ 400	> 400	∢
Fine	±0.5	±1	±1.5	±2	
Medium X	±1	±2	±3	±4	±3°
Coarse	±2	±3.5	±5	±6.5	

Tapped Holes acc. IS 14962
1) Tolerance Class Applied Crossmarked

Copyright ZF®

Date	Signature
Drawn 2023-02-16	Sachin
Checked 2023-02-17	A R

Dimensions in mm

CLUTCH-SERVO

Mass	Scale	Material No.	Date of first issue:		
3 kg	1 : 1	970 051 431 0	Doc.Code 005	Language ML	Sheet 2/2
Size A 1	CAD System CREO	EDN-No. 504967	Revision - H	Techn. Resp. 5630	Replacement for 884 613 400 0

100mm

Toute Communication ou reproduction de ce document, toute exploitation ou communication de son contenu sont interdites, sauf autorisation écrite. Tous droits de propriété industrielle réservés, notamment en matière de brevets ou de modèles.

Weitergabe sowie Vervielfältigung dieser Unterlage, Verwertung und Mitteilung ihres Inhalts nicht gestattet, soweit nicht ausdrücklich zugestanden. Zuwiderhandlungen verpflichten zu Schadensersatz. Alle Rechte für den Fall der Patent-, Gebrauchsmuster- oder Geschmacksmustereintragung vorbehalten.

Non è permesso consegnare a terzi o riprodurre questo documento, né utilizzare il contenuto o renderlo comunque noto a terzi senza autorizzazione scritta. Ogni violazione obbliga al risarcimento dei danni. Si riservano tutti i diritti derivanti da brevetti o modelli.

Copying of this document and giving it to others and the use or communication of the contents thereof, are forbidden without express authority. Offenders are liable to the payment of damages. All rights are reserved in the event of the grant of patent or registration of a utility model or design. This document is the subject of copyright.