<1>	SAFETY CHARACTERISTICS	0
<2>	SIGNIFICANT CHARACTERISTICS	0

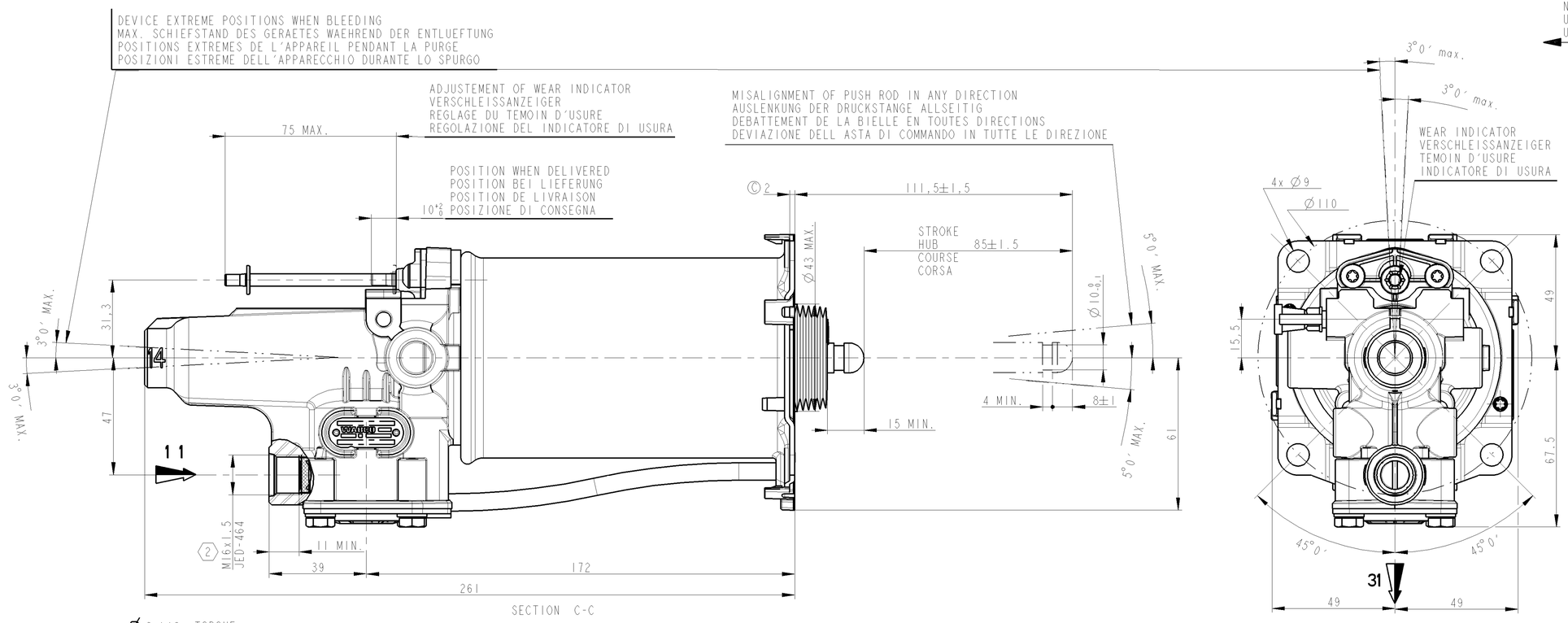

Ø 8 h13 TORQUE
ANZUGSMOMENT
COUPLE DE SERRAGE 5 +5 -0 Nm
COPPIA DI SERRAGGIO
32

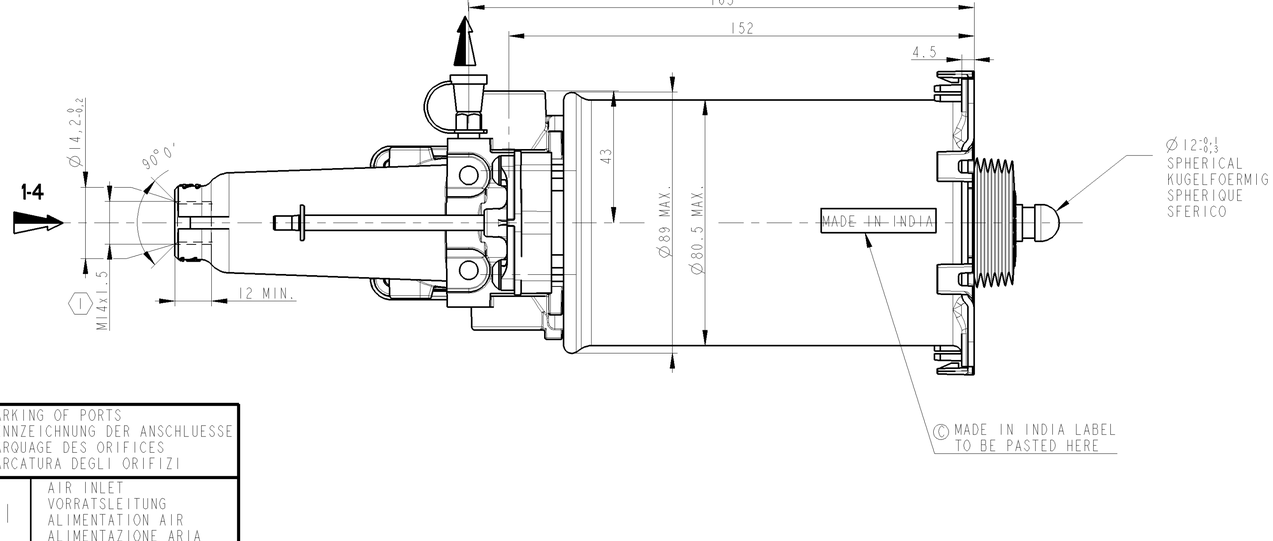

OIL VOLUME INPUT NUTZBARES HYDRAULISCHES VOLUMEN VOLUME D'HUILE ABSORBE VOLUME D'OLIO ASSORBITO	V=(SHxC)+K
K — ABSORPTION AT / AUFNAHME BEI / ABSORPTION A / ASSORBIMENTO A 120 BAR — FOR / FUER / POUR / PER C=0	K<1.5 cm3
SH — HYDRAULIC SECTIONAL AREA HYDRAULISCHER QUERSCHNITT SECTION HYDRAULIQUE SEZIONE IDRAULICO	4.89 cm2
C — GEAR DISENGAGING STROKE AUSKUPPLUNGSHUB COURSE DE DEBRAYAGE CORSA DI DISINNESTO	
HYDRAULIC FLUID :BRAKE FLUID HYDRAULIKFLUESSIGKEIT :BREMSFLUESSIGKEIT FLUIDE HYDRAULIQUE :GLYCERO ALCOOLIQUE FLUIDO IDRAULICO :LIQUIDO PER FRENI	SAE J 1703
THERMAL RANGE THERMISCHER ANWENDUNGSBEREICH TEMPERATURE D'UTILISATION TEMPERATURA DI UTILIZZAZIONE	-30°C...+100°C
SUPPLY PRESSURE VORRATSDRUCK PRESSION PNEUMATIQUE D'ALIMENTATION PRESSIONE PNEUMATICA DI ALIMENTAZIONE	10 BAR MAX.
NO STROKE LIMITER IN THE DEVICE KEIN HUBBEGRENZUNG IM GERAET PAS DE LIMITATION DE COURSE DANS L'APPAREIL NESSUNA LIMITAZIONE DI CORSA NELL'APPARECHIO	

CAUTION :DO NOT ACTUATE THE DEVICE IF NOT FITTED ON ITS MOUTING BRAKET
VORSICHT :GERAET DARF NUR IM EINGEBAUTEN ZUSTAND BETAETIGT WERDEN
ATTENTION :NE PAS ACTIONNER L'APPAREIL S'IL N'EST PAS FIXE SUR SON SUPPORT
ATTENZIONE:NON METTERE IN FUNZIONE L'APPARECCHIO SE NON E'FISSATO AL SUPPORTTO

MARKING OF PORTS KENNZEICHNUNG DER ANSCHLUESSE MARQUAGE DES ORIFICES MARCATURA DEGLI ORIFIZI	
11 — AIR INLET VORRATSLEITUNG ALIMENTATION AIR ALIMENTAZIONE ARIA	
1-4 — OIL INLET OELZUFLUSS ALIMENTATION HUILE ALIMENTAZIONE OLIO	
31 — AIR EXHAUST ENTLUEFTUNG ECHAPPEMENT SCARICO	TORQUE FOR CONNECTIONS ANZUGSMOMENT FUER ANSCHLUESSE COUPLE DE SERRAGE DES RACCORDS COPPIA DI SERRAGGIO DEI RACCORDI
32 — BLEED SCREW ENTLUEFTUNGSSCHRAUBE VIS DE PURGE VITE DI SPURGO	1 — 25 N.m MAX 2 — 34 N.m MAX

SYMBOL
SYMBOL
SYMBOLE
SIMBOLO

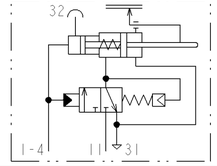

General Specification: JED-334-0							
Further Technical Data: 970 051 435 0							
Doc. Code: 035			Sheet: 1 To 5				
General Tolerances JED-261							
	Range of Nominal Dimensions (± mm)						
Class 1)	≤ 50	> 50 ≤ 180	> 180 ≤ 400	> 400			
Fine	0.5	1.0	1.5	2.0			
Medium	1.0	2.0	3.0	4.0	±3°		
Coarse	2.0	3.5	5.0	6.5			
Tapped Holes acc. ISO 4039 / JED-152							
1) Tolerance Class Applied Crossmarked							

Copyright WABCO®

Date	Signature
Drawn 2018-03-26	Maniraj
Checked 2018-07-23	Kalimuthu
Expert Praveen	

WABCO

CLUTCH-SERVO
KUPPLUNGSVERSTAERKER
SERVO-DEBRAYAGE
SERVO-FRIZIONE

Mass	Scale	Material No.	Date of first issue: 2012-08-07		
2.2 KG	1:1	970 051 435 0	Doc.Code 005	Language ML	Sheet 1/2
Size A 1	CAD System CREO	ECN-No. 175032 / Revision 2x C / Techn. Resp. 5630	Replacement for 884 619 422 0		

100mm

Tout Communication ou reproduction de ce document, toute exploitation ou communication de son contenu sont interdites, sauf autorisation écrite. Tous droits de propriété intellectuelle réservés, notamment en matière de brevets et de modèles.
Weitergabe sowie Vervielfältigung dieser Unterlage, Verwertung und Mitteilung ihres Inhalts nicht gestattet, soweit nicht ausdrücklich zugestanden. Zuwiderhandlungen verpflichten zu Schadensersatz. Alle Rechte für den Fall der Patenterteilung oder Gebrauchsmustereintragung vorbehalten.
Non è permesso consegnare o farci a riprodurre questo documento, né utilizzare il contenuto o renderlo comunque noto a terzi senza autorizzazione scritta. Tutti i diritti di proprietà intellectuale sono riservati, in particolare i diritti derivanti da brevetti o modelli.
Copying of this document and giving it to others and the use or communication of the contents thereof, are forbidden without express authority. Offenders are liable to the payment of damages. All rights are reserved in the event of the grant of patent or registration of a utility model or design. This document is the subject of copyright.

TM-L 970050435_035 C.9 in Work

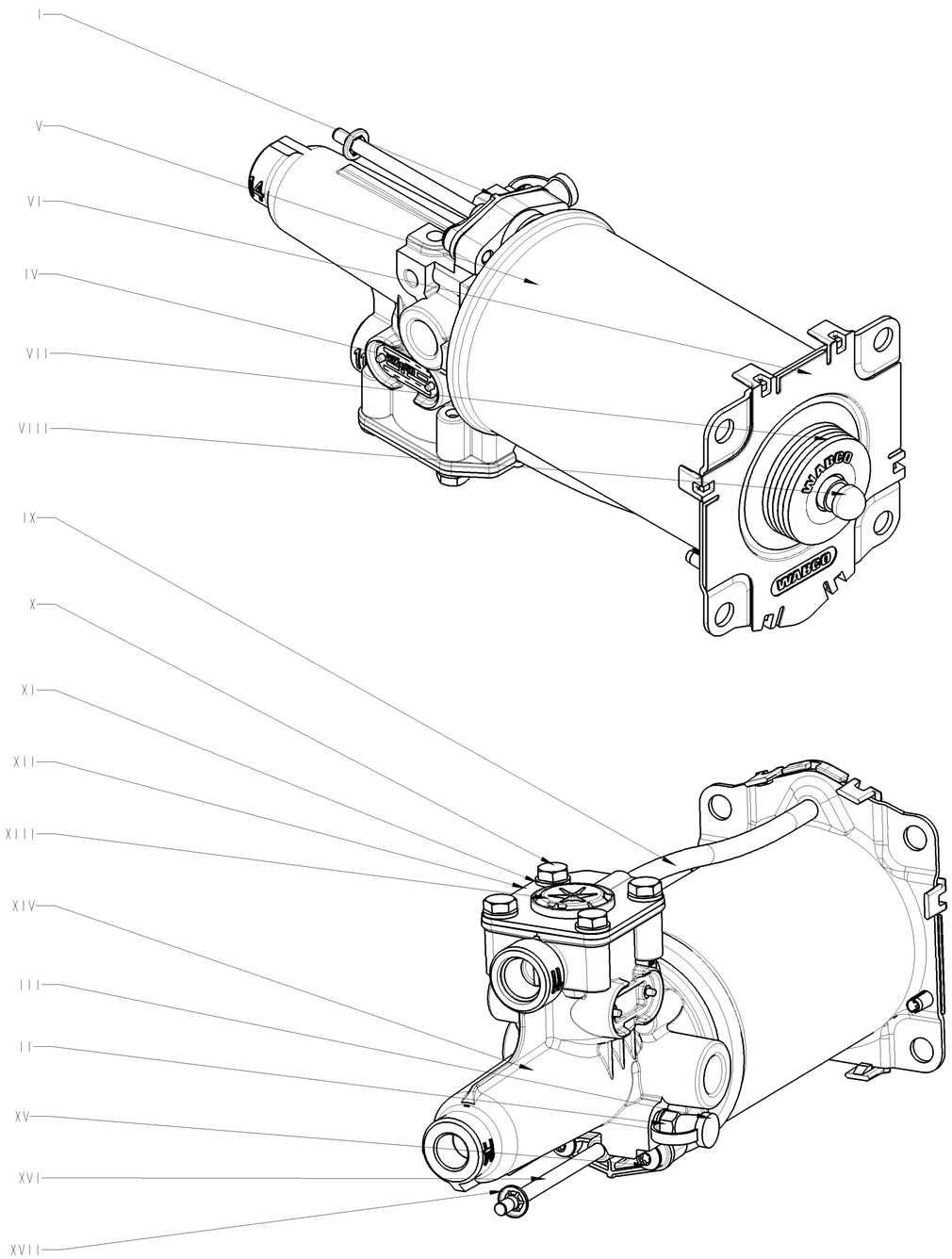

ITEM REPERE	MATERIAL MATIERE		SURFACE PROTECTION PROTECTION DE SURFACE	
I	JED-775-6	PPA,reinforced		
II	JED-020-M	STEEL	JED-256-0	PASSIVAT. Zn-ALLOY-STEEL
III	JED-670	TPE, 75 SHORE A, -40°C	JED-240-5	PAINT. STEEL PART
IV	JED-077-1	HIGH-GRADE ALUMINIUM	JED-007-1	Anodic Oxidation
V	JED-021M3	Thin Sheet,unalloyed Stee	JED-240-5	Paint, steel parts
VI	JED-462-3	PBT, SEMI-CRYSTALLINE		
VII	JED-376-4	EPDM, 60 IRHD, -40°C		
VIII	JED-626-1	High-Strenth. Free-Cut.Steel	JED-256	PASSIVAT. Zn-ALLOY-STEEL
IX		PA 12 PHLY BLACK		
X	JED-051M4	STEEL.SCREWS&NUTS,CL.8.8	JED-378	Inorg.Coating ZN/AL
XI	JED-048M1	STEEL STRIP FOR SPRINGS	JED-378	Inorg.Coating ZN/AL
XII	JED-021M1	Thin sheet,unalloyed stel	JED-256	PASSIVAT. Zn-ALLOY-STEEL
XIII	JED-534-2	PA 6.6, 30% GLASS FIBRES		
XIV	JED-029M1	AL-PRESSURE DIE CASTING	JED-259-1	Chromating of Al-alloys
XV	JED-051M4	STEEL SCREWS&NUTS,CL.8.8	JED-378	Inorg.Coating ZN/AL
XVI	JED-028M	Wrought aluminium alloy	JED-008	Hard anodic oxidation
XVII		Z6 CN 18-9 Stainless steel		

General Specification: JED-334-0
Further Technical Data: 970 051 435 0
Doc. Code: 035 Sheet: 1 To 5

General Tolerances JED-261

Class 1)	Range of Nominal Dimensions (± mm) ≤ 50	> 50 ≤ 180	> 180 ≤ 400	> 400	∡
Fine	0.5	1.0	1.5	2.0	
Medium	1.0	2.0	3.0	4.0	±3°
Coarse	2.0	3.5	5.0	6.5	

Tapped Holes acc. ISO 4039 / JED-152

1) Tolerance Class Applied Crossmarked

Copyright WABCO®

Date	Signature
Drawn 2018-03-26	Maniraj
Checked 2018-07-23	Kalimuthu
Expert Praveen	

WABCO

CLUTCH-SERVO
KUPPLUNGSVERSTAERKER
SERVO-DEBRAYAGE
SERVO-FRIZIONE

Mass	Scale	Material No.	Date of first issue: 2012-08-07		
2.2 KG	1:1	970 051 435 0	Doc.Code 005	Language ML	Sheet 2/2
Size A 1	CAD System CREO				

ECN-No.	Revision	Techn. Resp.	Replacement for
175032	- C	5630	884 619 422 0

100mm

Toute Communication ou reproduction de ce document, toute exploitation ou communication de son contenu sont interdites, sauf autorisation écrite. Tous droits de propriété industrielle réservés, notamment en matière de brevets et de modèles.

Weitergabe sowie Vervielfältigung dieser Unterlage, Verwertung und Mitteilung ihres Inhalts nicht gestattet, soweit nicht ausdrücklich zugesichert. Zuwiderhandlungen verpflichten zu Schadensersatz. Alle Rechte für den Fall der Patent- oder Gebrauchsmustererteilung vorbehalten.

Non è permesso consegnare a terzi o riprodurre questo documento, né utilizzare il contenuto o renderlo comunque noto a terzi senza autorizzazione scritta. Ogni violazione obbliga al risarcimento dei danni. Tutti i diritti derivanti da brevetti o modelli.

Copying of this document and giving it to others and the use or communication of the contents thereof, are forbidden without express authority. Offenders are liable to the payment of damages. All rights are reserved in the event of the grant of patent or registration of a utility model or design. This document is the subject of copyright.