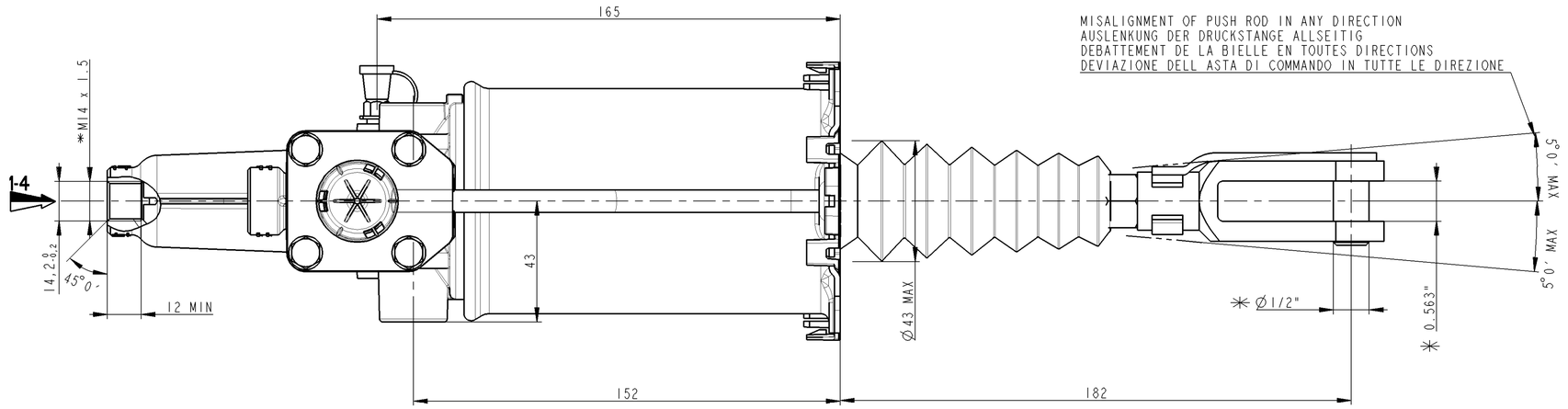

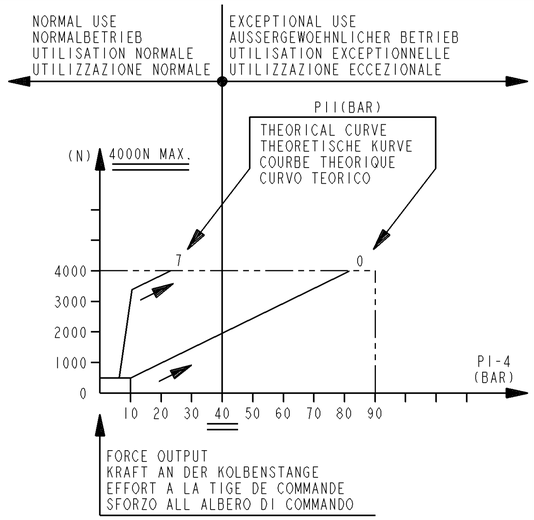

DEVICE EXTREME POSITIONS WHEN BLEEDING
MAX. SCHIEFSTAND DES GERAETES WAEHREND DER ENTLUEFTUNG
POSITIONS EXTREMES DE L'APPAREIL PENDANT LA PURGE
POSIZIONI ESTREME DELL'APPARECCHIO DURANTE LO SPURGO

Ø8 h13 TORQUE
ANZUGSMOMENT
COUPLE DE SERRAGE 5 +5 0 Nm
32 COPPIA DI SERRAGGIO

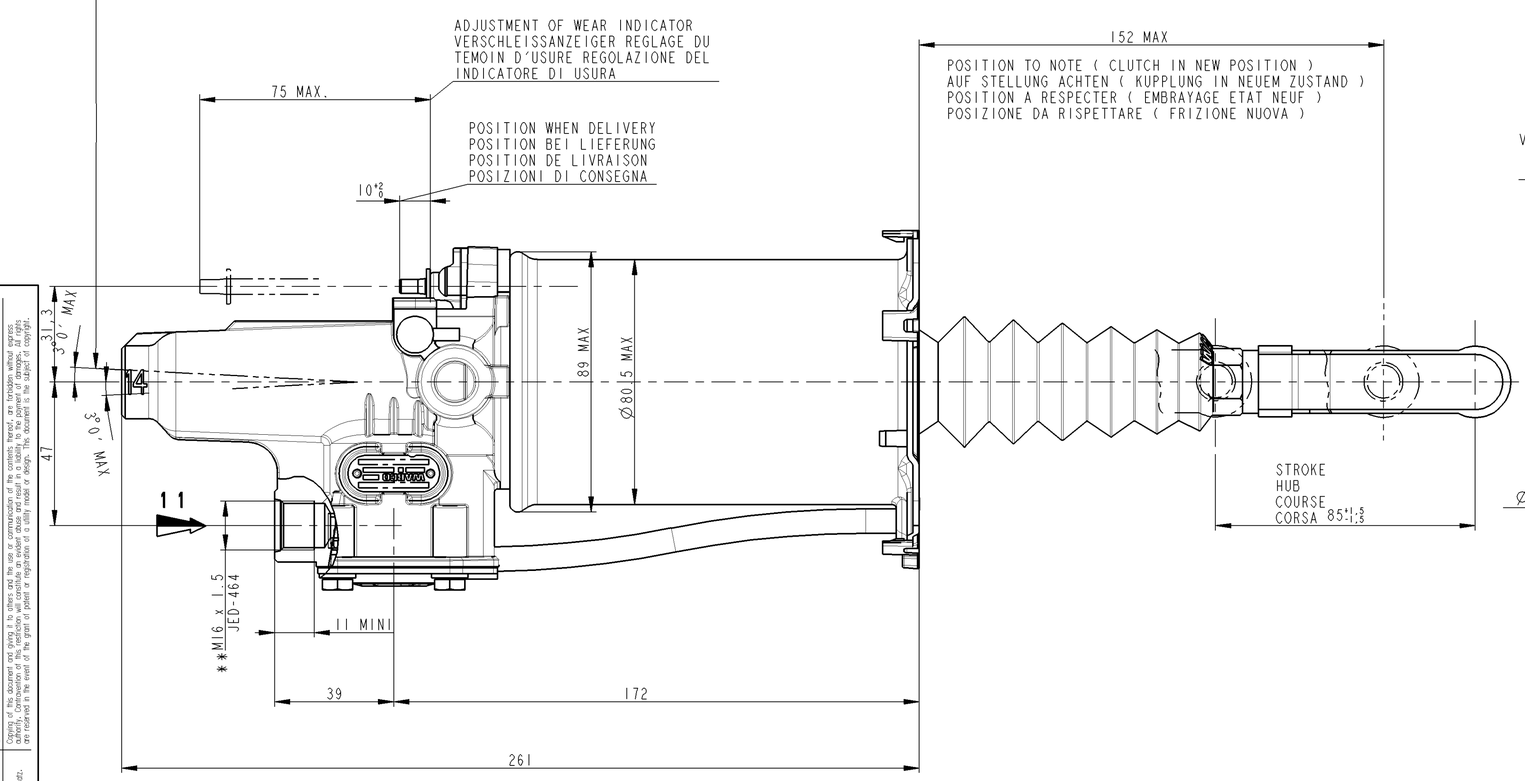

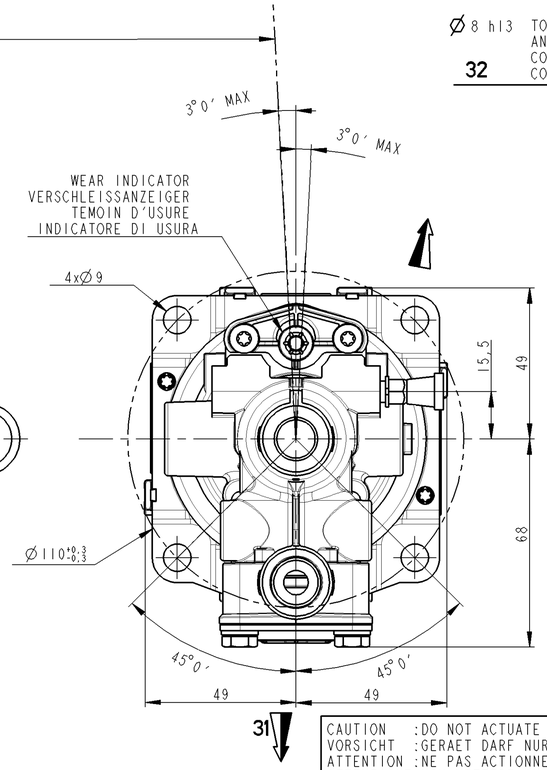

OIL VOLUME INPUT NUTZBARES HYDRAULISCHES VOLUMEN VOLUME D'HUILE ABSORBE VOLUME D'OLIO ASSORBITO	V=(SHxC)+K
K — ABSORPTION AT / AUFNAHME BEI / ABSORPTION A / ASSORBIMENTO A 90 BAR — FOR / FUER / POUR / PER C=0	K<1.5 cm3
SH — HYDRAULIC SECTIONAL AREA HYDRAULISCHER QUERSCHNITT SECTION HYDRAULIQUE SEZIONE IDRAULICO	4.89 cm2
C — GEAR DISENGAGING STROKE AUSKUPPLUNGSHUB COURSE DE DEBRAYAGE CORSA DI DISINNESTO	
HYDRAULIC FLUID :BRAKE FLUID HYDRAULIKFLUESSIGKEIT :BREMSFLUESSIGKEIT FLUIDE HYDRAULIQUE :GLYCERO ALCOOLIQUE FLUIDO IDRAULICO :LIQUIDO PER FRENI	SAE J 1703
THERMAL RANGE THERMISCHER ANWENDUNGSBEREICH TEMPERATURE D'UTILISATION TEMPERATURA DI UTILIZZAZIONE	-40°C..+100°C
SUPPLY PRESSURE VORRATSDRUCK PRESSION PNEUMATIQUE D'ALIMENTATION PRESSIONE PNEUMATICA DI ALIMENTAZIONE	10 BAR MAX
NO STROKE LIMITER IN THE DEVICE KEIN HUBBEGRENZUNG IM GERAET PAS DE LIMITATION DE COURSE DANS L'APPAREIL NESSUNA LIMITAZIONE DI CORSA NELL'APPARECHIO	

CAUTION :DO NOT ACTUATE THE DEVICE IF NOT FITTED ON ITS MOUTING BRAKET
VORSICHT :GERAET DARF NUR IM EINGEBAUTEN ZUSTAND BETAETIGT WERDEN
ATTENTION :NE PAS ACTIONNER L'APPAREIL S'IL N'EST PAS FIXE SUR SON SUPPORT
ATTENZIONE:NON METTERE IN FUNZIONE L'APPARECCHIO SE NON E'FISSATO AL SUPPORTTO

MARKING OF PORTS
KENNZEICHNUNG DER ANSCHLUESSE
MARQUAGE DES ORIFICES
MARCATURA DEGLI ORIFIZI

11	AIR INLET VORRATSLEITUNG ALIMENTATION AIR ALIMENTAZIONE ARIA	31	AIR EXHAUST ENTLUEFTUNG ECHAPPEMENT SCARICO
1-4	OIL INLET OELZUFLUSS ALIMENTATION HUILE ALIMENTAZIONE OLIO	32	BLEED SCREW ENTLUEFTUNGSSCHRAUBE VIS DE PURGE VITE DI SPURGO

TORQUE FOR CONNECTIONS
ANZUGSMOMENT FUER ANSCHLUESSE
COUPLE DE SERRAGE DES RACCORDS
COPPIA DI SERRAGGIO DEI RACCORDI

* 25 N.m MAX
** 34 N.m MAX

✳ CAUTION: INCH DIMENSIONS
VORSICHT: MASSE IN INCH
ATTENTION : COTES EN POUCE
ATTENTIONE: DIMENSIONI IN INCH

SYMBOL
SYMBOL
SYMBOLE
SIMBOLO

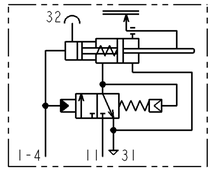

General Specification: JED-334-0					
Further Technical Data:					
Doc. Code:		Sheet:		To	
General Tolerances JED-261					
Class 1)	Range of Nominal Dimensions (± mm) ≤ 50	> 50 ≤ 180	> 180 ≤ 400	> 400	∢
Fine	0.5	1.0	1.5	2.0	±3°
Medium	1.0	2.0	3.0	4.0	
Coarse	2.0	3.5	5.0	6.5	
Tapped Holes acc.					
1) Tolerance Class Applied Crossmarked					

Copyright WABCO®

Date	Signature
Drawn 2012-07-04	Rossard
Checked 2012-08-06	Klueck
Expert SAUNIER	

WABCO

CLUTCH SERVO
KUPPLUNGSVERSTAERKER
SERVO-DEBRAYAGE
SERVO FRIZIONE

Mass	Scale	Material No.	Date of first issue: 2005-06-20		
2.5 KG	1,000	970 051 451 0	Doc.Code: 005	Language: ML	Sheet: 1/2
Size: A 1	CAD System: Pro/E				

ECN-No.	Revision	Techn. Resp.	Replacement for
151813	1x A	5630	884 017 601 0

100mm

Tutti Comunicazione o riproduzione di ce document, tuute esploitazion ou comunicazion de son contenu sont interdites, sauf autorisation expresse. Tout manquement à cette règle constituera un délit, ouvrant et exposa son auteur au versement de dommages. et Ogni utilizzazione ed estensione di questo documento, ne utilizzarne il contenuto o renderlo comunque noto a terzi senza autorizzazione espressa. Ogni violazione costituirà un illecito dovrà e comporterà il risarcimento dei danni subiti.

Weitergabe sowie Vervielfältigung dieser Unterlage, Verwertung und Mitteilung ihres Inhalts nicht gestattet, soweit nicht ausdrücklich zugestanden. Zuwiderhandlungen verpflichten zu Schadenersatz. Alle Rechte für den Fall der Patenterteilung oder Gebrauchsmustereintragung vorbehalten.

Note e permesso consegnare o terzi o riprodurre questo documento, ne utilizzarne il contenuto o renderlo comunque noto a terzi senza autorizzazione espressa. Ogni violazione costituirà un illecito dovrà e comporterà il risarcimento dei danni subiti.

Copying of this document and giving it to others and the use or communication of its contents thereof, are forbidden without express authority. Contravention of this restriction will constitute an evident delict and result in a liability to the payment of damages. All rights granted in the event of the grant of patent or registration of a utility model or design, are reserved.

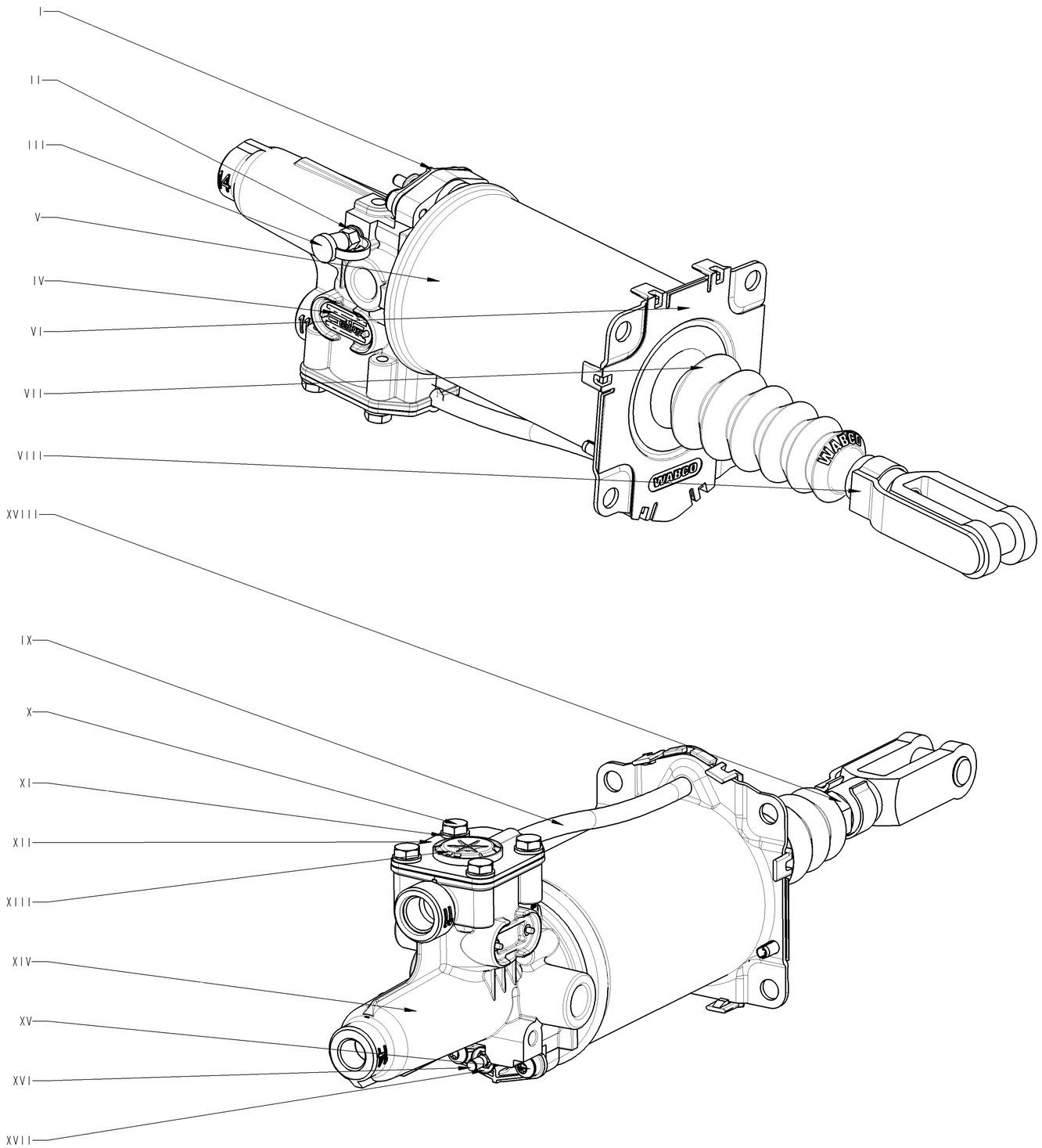

ITEM REPERE	MATERIAL MATIERE		SURFACE PROTECTION PROTECTION DE SURFACE	
I	JED-775-6	PPA,reinforced		
II	JED-020-M	STEEL	JED-256-0	PASSIVAT. Zn-ALLOY-STEEL
III	JED-670	TPE, 75 SHORE A, -40°C	JED-240-5	PAINT. STEEL PART
IV	JED-077-I	HIGH-GRADE ALUMINIUM	JED-007-I	Anodic Oxidation
V	JED-021M3	Thin Sheet,unalloyed Stee	JED-240-5	Paint, steel parts
VI	JED-462-3	PBT, SEMI-CRYSTALLINE		
VII	JED-376-4	EPDM, 60 IRHD, -40°C		
VIII		STEEL-SAE J 1199-8	JED-256-0	PASSIVAT. Zn-ALLOY-STEEL
IX		PA 12 PHLY BLACK		
X	JED-051M4	STEEL.SCREWS&NUTS,CL.8.8	JED-378	Inorg.Coating ZN/AL
XI	JED-048MI	STEEL STRIP FOR SPRINGS	JED-378	Inorg.Coating ZN/AL
XII	JED-021MI	Thin sheet,unalloyed stel	JED-256	PASSIVAT. Zn-ALLOY-STEEL
XIII	JED-534-2	PA 6.6, 30% GLASS FIBRES		
XIV	JED-029MI (A)	AL-PRESSURE DIE CASTING	JED-259-I (A)	Chromating of Al-alloys
XV	JED-051M4	STEEL SCREWS&NUTS,CL.8.8	JED-378	Inorg.Coating ZN/AL
XVI	JED-028M	Wrought aluminium alloy	JED-008	Hard anodic oxidation
XVII		Z6 CN 18-9 Stainless steel		
XVIII		STEEL		Zn

General Specification: JED-334-0
Further Technical Data:
Doc. Code: Sheet: To

General Tolerances JED-261

Class 1)	Range of Nominal Dimensions (± mm) ≤ 50	> 50 ≤ 180	> 180 ≤ 400	> 400	∢
Fine	0.5	1.0	1.5	2.0	
Medium	1.0	2.0	3.0	4.0	±3°
Coarse	2.0	3.5	5.0	6.5	

Tapped Holes acc.
1) Tolerance Class Applied Crossmarked

Copyright WABCO®

Date	Signature
Drawn 2012-07-04	Rossard
Checked 2012-08-06	Klueck
Expert SAUNIER	

WABCO

CLUTCH SERVO
KUPPLUNGSVERSTAERKER
SERVO-DEBRAYAGE
SERVO FRIZIONE

Mass	Scale	Material No.	Date of first issue: 2005-06-20
2.5 KG	1,000	970 051 451 0	Doc.Code 005 / Language ML / Sheet 2/2
Size A 1	CAD System Pro/E		

ECN-No.	Revision	Techn. Resp.	Replacement for
151813	2x A	5630	884 017 601 0

100mm

Tout Communication ou reproduction de ce document, toute exploitation ou communication de son contenu sont interdites, sauf décision expresse. Tout manquement à cette règle constitue un délit, ouvrant lieu à action en dommages et intérêts. Tous droits de propriété industrielle ou de propriété intellectuelle demeurent la propriété de WABCO.

Weitergabe sowie Vervielfältigung dieser Unterlage, Verwertung und Mitteilung ihres Inhalts nicht gestattet, soweit nicht durdrücklich zugestanden. Zuwiderhandlungen stehen erlassrechtlichen Mitbrauch dar und verpflichten zu Schadensersatz. Alle Rechte für den Fall der Patenterteilung oder Gebrauchsmustereintragung vorbehalten.

Non è permesso consegnare o terzi o riprodurre questo documento, ne utilizzarne il contenuto o renderlo comunque noto a terzi senza autorizzazione espressa. Ogni violazione costituisce illecito civile e comporterà il risarcimento dei danni subiti. Tutti i diritti di proprietà industriale o intellectuale sono riservati a WABCO.

Copying of this document and giving it to others and the use or communication of the contents thereof, are forbidden without express authority. Contravention of this restriction will constitute an evident abuse and result in a liability to the payment of damages. All rights are reserved in the event of the grant of patent or registration of a utility model or design. This document is the property of WABCO.