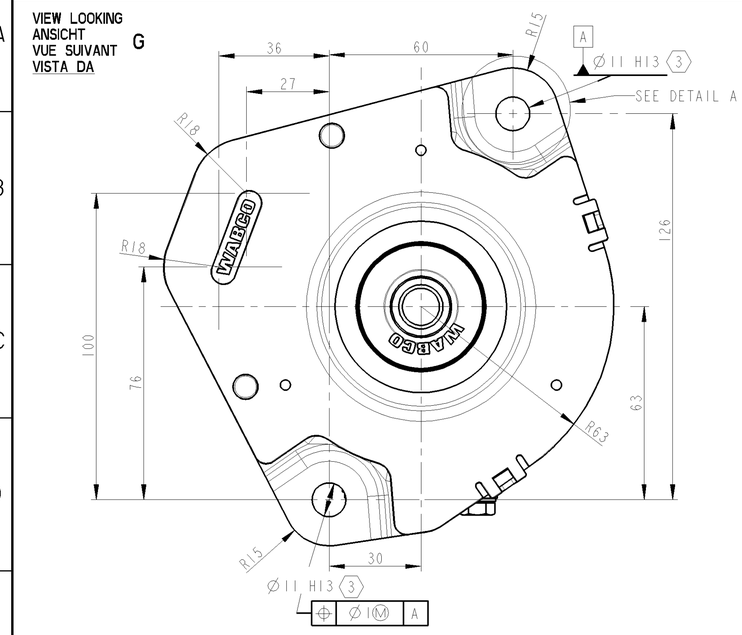

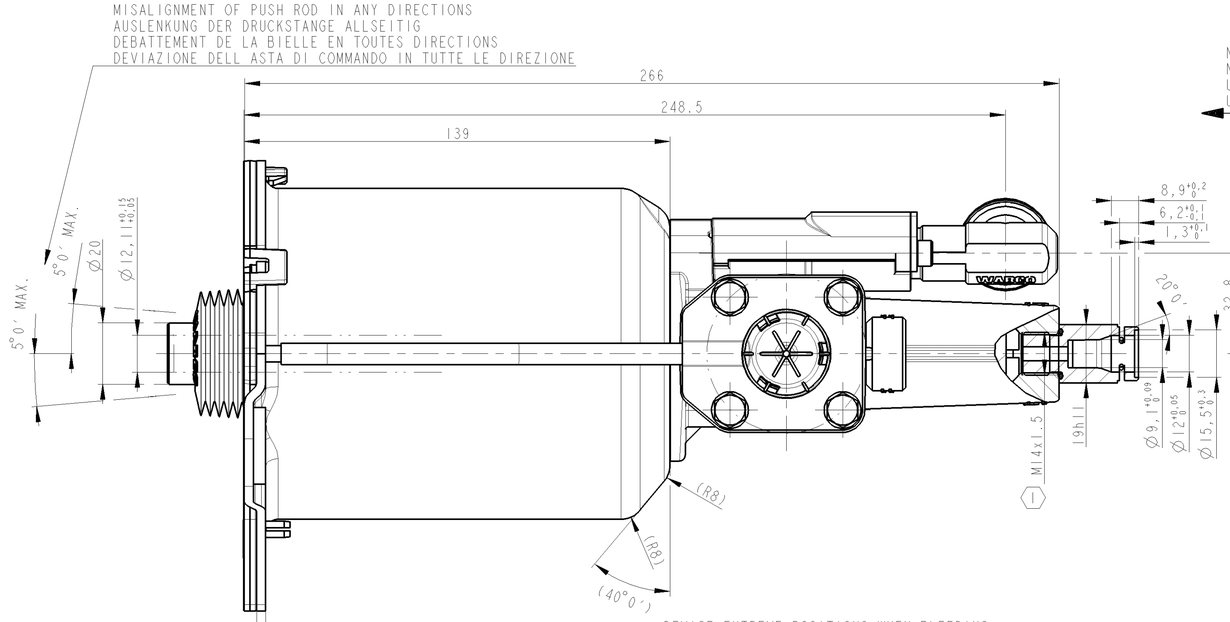

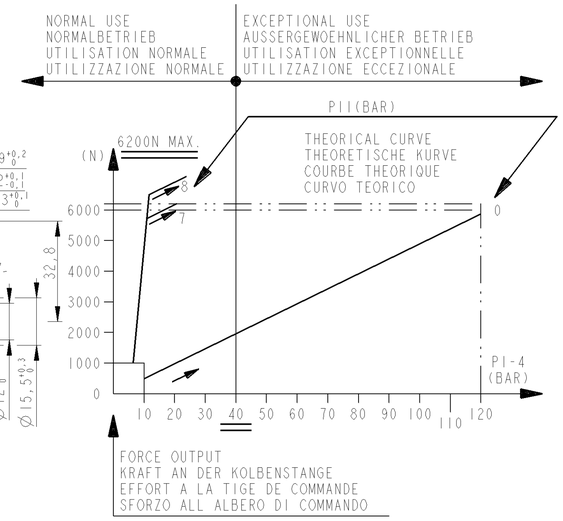

DEVICE EXTREME POSITIONS WHEN BLEEDING
MAX. SCHIEFSTAND DES GERAETES WAEHREND DER ENTLUEFTUNG
POSITIONS EXTREMES DE L'APPAREIL PENDANT LA PURGE
POSIZIONI ESTREME DELL' APPARECCHIO DURANTE LO SPURGO

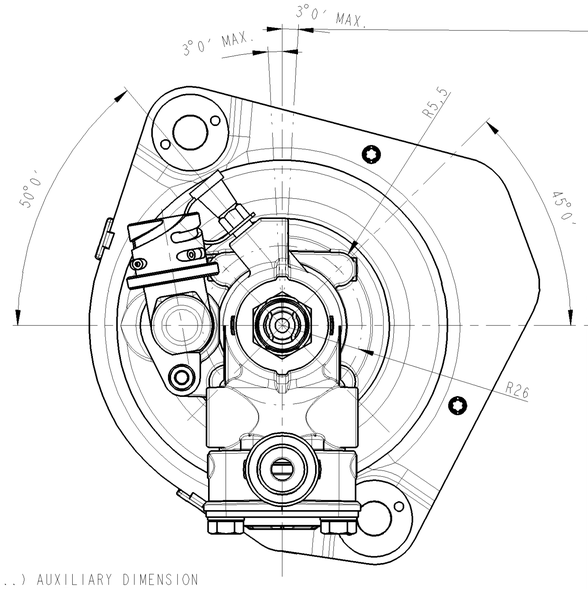

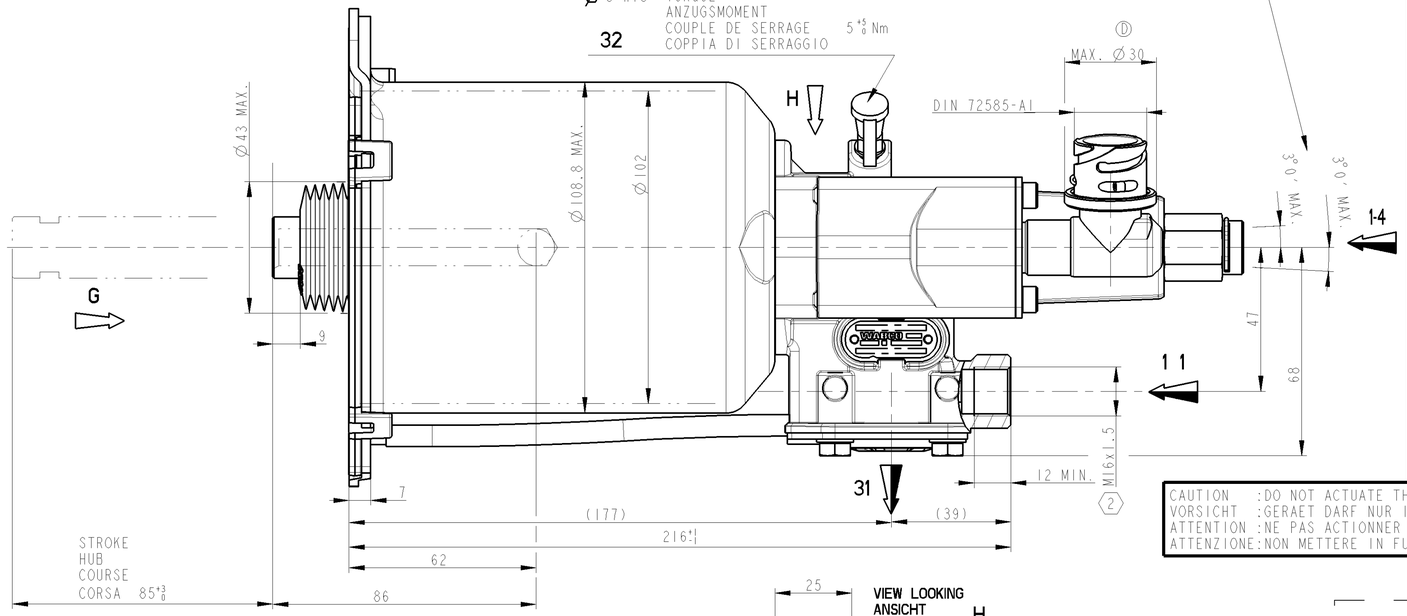

(...) AUXILIARY DIMENSION
(...) HILFMASS
(...) DIMENSION AUXILIAIRE
(...) DIMENSIONE AUSILIARIA

OIL VOLUME INPUT NUTZBARES HYDRAULISCHES VOLUMEN VOLUME D'HUILE ABSORBE VOLUME D'OLIO ASSORBITO				V=(SHxC)+K
K	ABSORPTION AT AUFNAHME BEI ABSORPTION A ASSORBIMENTO A	120 BAR	FOR FUER POUR PER	C=0	K<1.5 cm3
SH	HYDRAULIC SECTIONAL AREA HYDRAULISCHER QUERSCHNITT SECTION HYDRAULIQUE SEZIONE IDRAULICO			4.89 cm2
C	GEAR DISENGAGING STROKE AUSKUPPLUNGSHUB COURSE DE DEBRAYAGE CORSA DI DISINNESTO			

HYDRAULIC FLUID HYDRAULIKFLUESSIGKEIT FLUIDE HYDRAULIQUE FLUIDO IDRAULICO	:BRAKE FLUID :BREMSFLUESSIGKEIT :GLYCERO ALCOOLIQUE :LIQUIDO PER FRENI	SAE J 1703
THERMAL RANGE THERMISCHER ANWENDUNGSBEREICH TEMPERATURE D'UTILISATION TEMPERATURA DI UTILIZZAZIONE	-20°C..+100°C	
SUPPLY PRESSURE VORRATSDRUCK PRESSION PNEUMATIQUE D'ALIMENTATION PRESSIONE PNEUMATICA DI ALIMENTAZIONE	10 BAR MAX	
NO STROKE LIMITER IN THE DEVICE KEIN HUBBEGRENZUNG IM GERAET PAS DE LIMITATION DE COURSE DANS L'APPAREIL NESSUNA LIMITAZIONE DI CORSA NELL'APPARECHIO		

CAUTION :DO NOT ACTUATE THE DEVICE IF NOT FITTED ON ITS MOUTING BRAKET
VORSICHT :GERAET DARF NUR IM EINGEBAUTEN ZUSTAND BETAETIGT WERDEN
ATTENTION :NE PAS ACTIONNER L'APPAREIL S'IL N'EST PAS FIXE SUR SON SUPPORT
ATTENZIONE:NON METTERE IN FUNZIONE L'APPARECCHIO SE NON E'FISSATO AL SUPPORTTO

MARKING OF PORTS
KENNZEICHNUNG DER ANSCHLUESSE
MARQUAGE DES ORIFICES
MARCATURA DEGLI ORIFIZI

11	AIR INLET VORRATSLEITUNG ALIMENTATION AIR ALIMENTAZIONE ARIA	31	AIR EXHAUST ENTLUEFTUNG ECHAPPEMENT SCARICO
1-4	OIL INLET OELZUFLUSS ALIMENTATION HUILE ALIMENTAZIONE OLIO	32	BLEED SCREW ENTLUEFTUNGSSCHRAUBE VIS DE PURGE VITE DI SPURGO

TORQUE FOR CONNECTIONS
ANZUGSMOMENT FUER ANSCHLUESSE
COUPLE DE SERRAGE DES RACCORDS
COPPIA DI SERRAGGIO DEI RACCORDI
(1) 25 N.m MAX.
(2) 40 N.m MAX.
(3) 39 +3/-3 N.m

LENGTH OF CABLE BETWEEN SENSOR AND ELECTRONICS KABELLANGE ZWISCHEN SENSOR UND ELEKTRONIC LONGUEUR DE CABLE ENTRE CAPTEUR ET ELECTRONIQUE LUGHEZZA DEL CAVO TRA SENSORE E CENTRALINA ELETTRONICA 10m MAX.	MEASURING PRINCIPLE MESSPRINZIP PRINCIPE DE MESURE PRINCIPIO DI MISURA INDUCTIVE INDUKTIV INDUCTIF INDUTTIVO
SUPPLY VOLTAGE SPEISESPANNUNG TENSION D'ALIMENTATION TENSION D'ALIMENTAZZIONE PULSE IMPULS IMPULSION IMPULO 8 ....16V DC	OHMIC RESISTANCE OHMSCHER WIDERSTAND RESISTANCE OHMIQUE RISISTANZA OHMICO 72 Ω ± 5 %
PRECISION AFTER CALIBRATION GENAUIGKEIT NACH KALIBRIERUNG PRECISION APRES CALIBRAGE PRECISIONE DOPO CALIBRATURA ± 5 % FULL SCALE	CURRENT CONSUMPTION STROMAUFNAHME CONSOMMATION DE COURANT ASSORBIMENTO DI CORRENTE 90mA MAX.

SYMBOL
SYMBOL
SYMBOLE
SIMBOLO

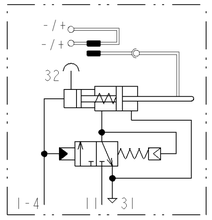

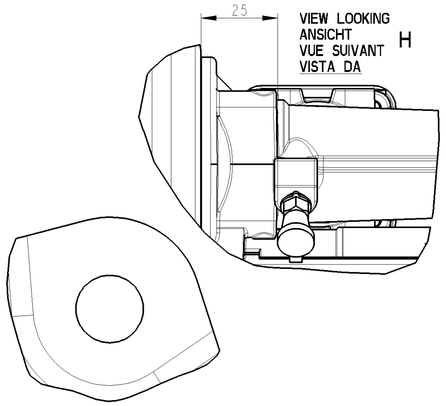

E DETAIL A
SCALE 2,000

General Specification: ISO 8015, JED-334-1, Size ISO 14405 LP					
Further Technical Data: 970 051 405 0					
Doc. Code: 035		Sheet: 1 To 4			
General Tolerances JED-261					
Range of nominal dimensions in mm					
Class 1)	≤ 50	> 50 ≤ 180	> 180 ≤ 400	> 400	∡
Fine	±0.5	±1	±1.5	±2	
Medium X	±1	±2	±3	±4	±3°
Coarse	±2	±3.5	±5	±6.5	
Tapped Holes acc. ISO 4039 / JED-152					
1) Tolerance Class Applied Crossmarked					

Copyright ZF®

Date	Signature
Drawn 2023-02-16	Sachin
Checked 2023-02-17	A R

Dimensions in mm

CLUTCH-SERVO

Mass	Scale	Material No.	Date of first issue: 2006-02-20		
3 kg	1:1 (2:1)	970 051 454 0	Doc.Code 005	Language ML	Sheet 1/2
Size A 1	CAD System CREO	EQN-No. 504967	Revision 1x E	Techn. Resp. 5630	Replacement for 884 057 850 0

100mm

Toute Communication ou reproduction de ce document, toute exploitation ou communication de son contenu sont interdites, sauf autorisation écrite. Tous droits de propriété industrielle réservés, notamment en matière de brevets ou de modèles.
Weitergabe sowie Vervielfältigung dieser Unterlage, Verwertung und Mitteilung ihres Inhalts nicht gestattet, soweit nicht ausdrücklich zugestanden. Zuwiderhandlungen verpflichten zu Schadensersatz. Alle Rechte für den Fall der Patent- oder Gebrauchsmustereintragung vorbehalten.
Non è permesso consegnare a terzi o riprodurre questo documento, né utilizzare il contenuto o renderlo comunque noto a terzi senza autorizzazione scritta. Tutti i diritti derivanti da brevetti o modelli.
Copying of this document and giving it to others and the use or communication of the contents thereof, are forbidden without express authority. Offenders are liable to the payment of damages. All rights are reserved in the event of the grant of patent or registration of a utility model or design. This document is the subject of copyright.

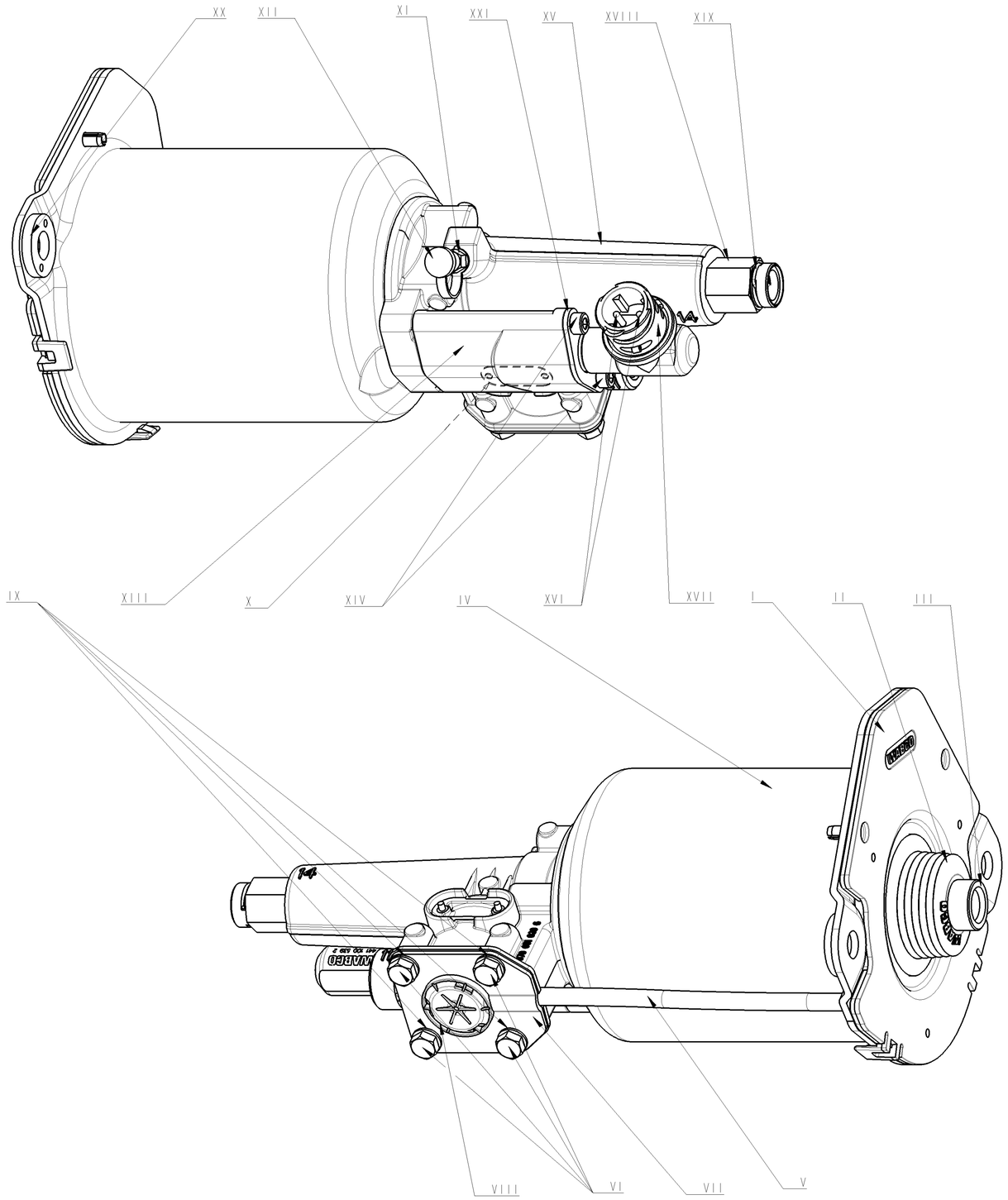

POS.	MATERIAL MATERIAL MATIERE (JED-502) MATERIALE	SURFACE PROTECTION OBERFLAECHENSCHUTZ PROTECTION DE SURFACE PROTEZIONE SUPERFICIALE (JED-502)
I	PBT - JED-462-3	-
II	EPDM - JED-376-4	-
III	Steel - JED-020-I	Zn JED-256
IV	Steel - JED-021M3	Cataphoretic coating JED-240-5
V	PA12	BLACK - NOIR
VI	Steel CL8-8 JED-051M4	Zn-Al JED-378
VII	Steel - JED-021MI	Zn JED-256
VIII	PA6.6, 30% GF - JED-534-2	BLACK - NOIR
IX	Steel - JED-048MI	Zn-Al JED-378
X	Al - JED-077-I	Anodic oxydation - JED-007-I
XI	Steel - JED-020M	Zn JED-256
XII	TPE - JED-670	-
XIII	Al-Si - JED-029MI	Chromating of Al-alloys JED-259-I
XIV	Steel - JED-051M4	Zn JED-256
XV	Al-Si - JED-029MI	Chromating of Al-alloys JED-259-I
XVI	Cu-zn JED-570-885	Ag JED-570-665
XVII	PA6.6, GF	BLACK - NOIR
XVIII	Steel - JED-020-I	WHITE-BLANC Zn (without CR6) JED-256-4
XIX	Steel - JED-049M	Plastic coating JED-232-5
XX	Steel - JED-021M3	Cataphoretic coating JED-240-5
XXI	Steel - JED-021MI	Zn JED-256

General Specification: ISO 8015, JED-334-1, Size ISO 14405 LP

Further Technical Data: 970 051 405 0

Doc. Code: 035 — Sheet: 1 To 4

General Tolerances JED-261

Class 1)	Range of nominal dimensions in mm ≤ 50	> 50 ≤ 180	> 180 ≤ 400	> 400	∠
Fine	±0.5	±1	±1.5	±2	
Medium	±1	±2	±3	±4	±3°
Coarse	±2	±3.5	±5	±6.5	

Tapped Holes acc. ISO 4039 / JED-152

1) Tolerance Class Applied Crossmarked

Copyright ZF®

	Date	Signature
Drawn	2023-02-16	Sachin
Checked	2023-02-17	A R

Dimensions in mm

CLUTCH-SERVO

Mass	Scale	Material No.	Date of first issue: 2006-02-20		
3 kg	1 : 1	970 051 454 0	Doc.Code 005	Language ML	Sheet 2/2
Size A 1	CAD System CREO	EDN-No. 504967	Revision - E	Techn. Resp. 5630	Replacement for 884 057 850 0

100mm

Tutte Comunicazioni o riproduzione di questo documento, nonché utilizzo e comunicazione del suo contenuto sono vietate, salvo autorizzazione esplicita. Tutti i diritti, compresi quelli derivanti da brevetto o registrazione di un modello di utilità, sono riservati.

Weitergabe sowie Vervielfältigung dieser Unterlage, Verwertung und Mitteilung ihres Inhalts nicht gestattet, soweit nicht ausdrücklich zugestanden. Zuwiderhandlungen verpflichten zu Schadensersatz. Alle Rechte für den Fall der Patent- oder Gebrauchsmustereintragung vorbehalten.

Non è permesso consegnare a terzi o riprodurre questo documento, né utilizzarne il contenuto o renderlo comunque noto a terzi in assenza esplicita. Tutti i diritti, compresi quelli derivanti da brevetto o registrazione di un modello di utilità, sono riservati.

Copying of this document and giving it to others and the use or communication of the contents thereof, are forbidden without express authority. Offenders are liable to the payment of damages. All rights are reserved in the event of the grant of patent or registration of a utility model or design. This document is the subject of copyright.