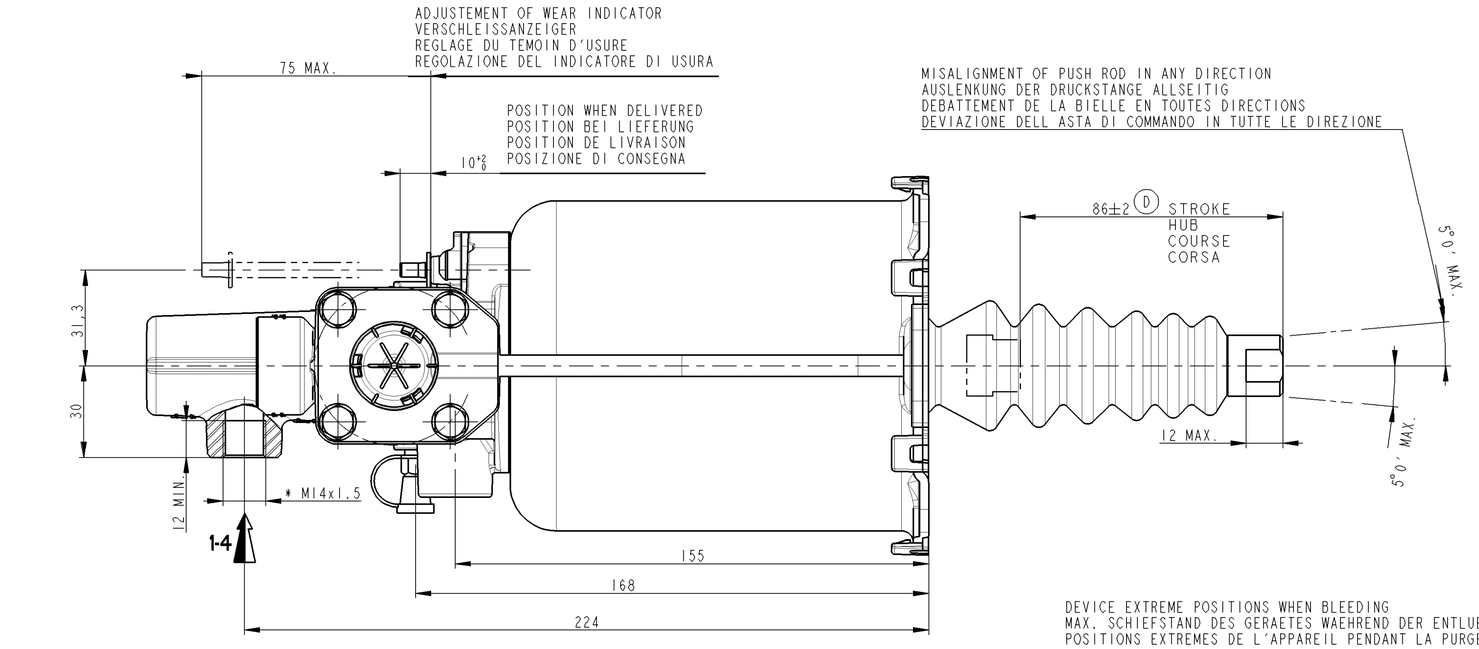

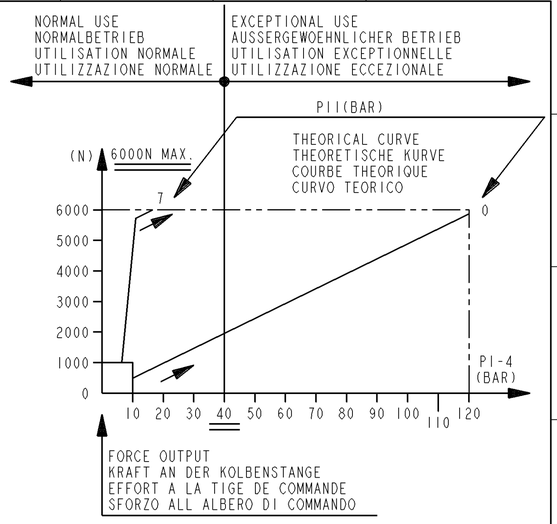

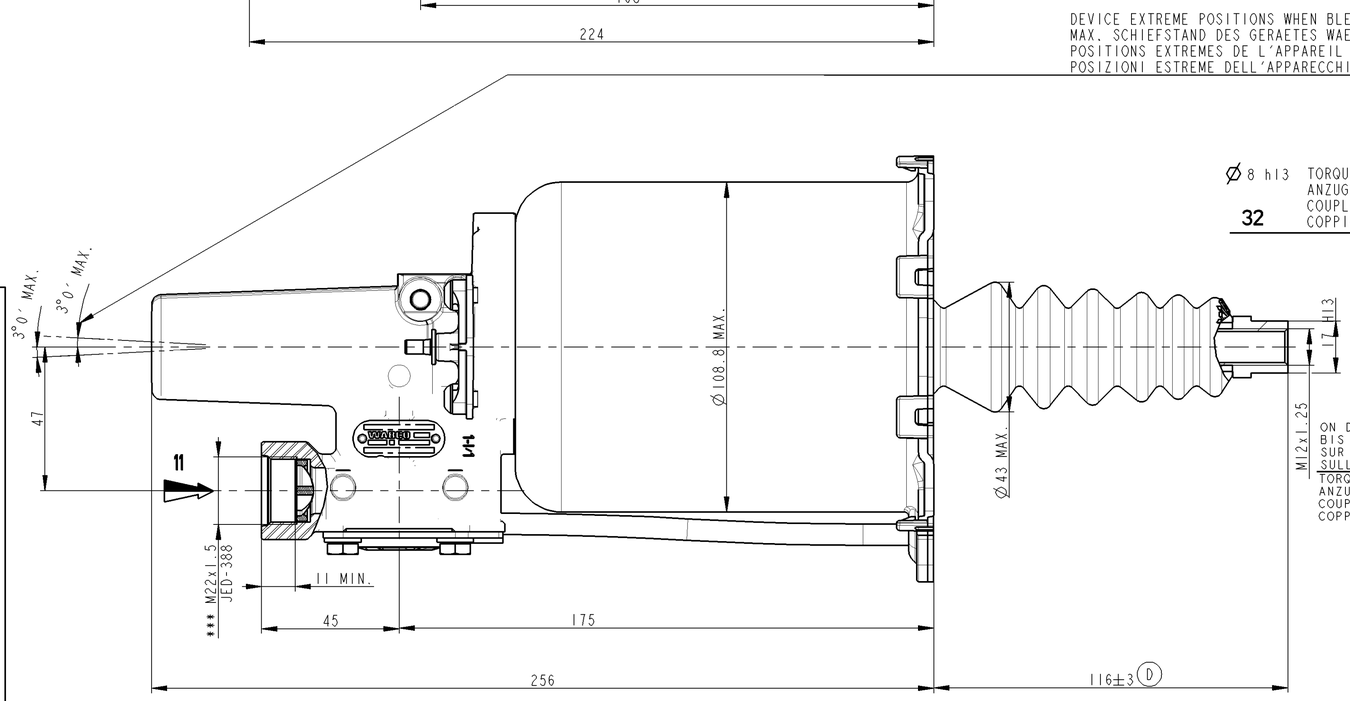

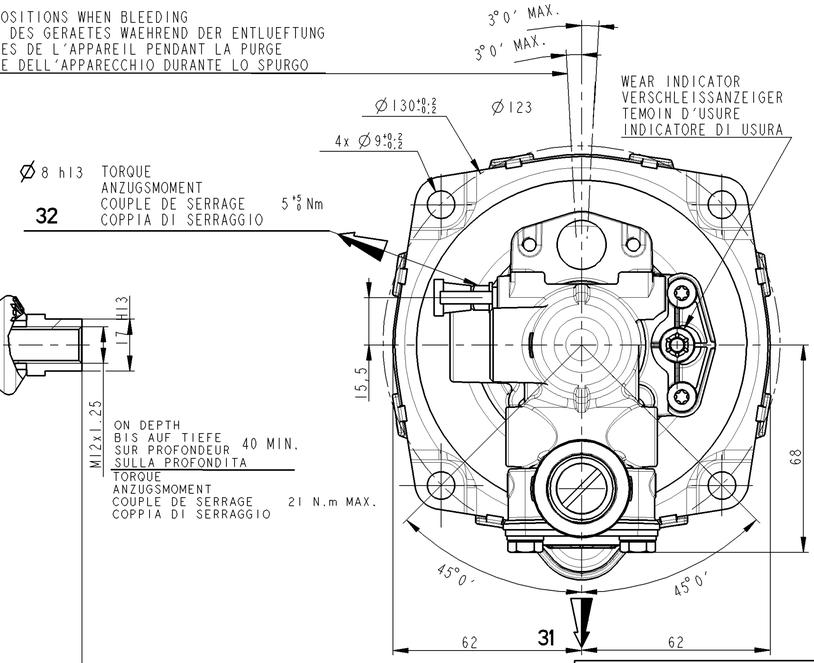

OIL VOLUME INPUT NUTZBARES HYDRAULISCHES VOLUMEN VOLUME D'HUILE ABSORBE VOLUME D'OLIO ASSORBITO				V=(SHxC)+K
K	ABSORPTION AT AUFNAHME BEI ABSORPTION A ASSORBIMENTO A	120 BAR	FOR FUER POUR PER	C=0	K<1.5 cm3
SH	HYDRAULIC SECTIONAL AREA HYDRAULISCHER QUERSCHNITT SECTION HYDRAULIQUE SEZIONE IDRAULICO			4.89 cm2
C	GEAR DISENGAGING STROKE AUSKUPPLUNGSHUB COURSE DE DEBRAYAGE CORSA DI DISINNESTO			

HYDRAULIC FLUID HYDRAULIKFLUESSIGKEIT FLUIDE HYDRAULIQUE FLUIDO IDRAULICO	:BRAKE FLUID :BREMSFLUESSIGKEIT :GLYCERO ALCOOLIQUE :LIQUIDO PER FRENI	SAE J 1703
THERMAL RANGE THERMISCHER ANWENDUNGSBEREICH TEMPERATURE D'UTILISATION TEMPERATURA DI UTILIZZAZIONE	-40°C..+100°C	
SUPPLY PRESSURE VORRATSDRUCK PRESSION PNEUMATIQUE D'ALIMENTATION PRESSIONE PNEUMATICA DI ALIMENTAZIONE	10 BAR MAX	
NO STROKE LIMITER IN THE DEVICE KEIN HUBBEGRENZUNG IM GERAET PAS DE LIMITATION DE COURSE DANS L'APPAREIL NESSUNA LIMITAZIONE DI CORSA NELL'APPARECHIO		

CAUTION :DO NOT ACTUATE THE DEVICE IF NOT FITTED ON ITS MOUTING BRAKET
VORSICHT :GERAET DARF NUR IM EINGEBAUTEN ZUSTAND BETAETIGT WERDEN
ATTENTION :NE PAS ACTIONNER L'APPAREIL S'IL N'EST PAS FIXE SUR SON SUPPORT
ATTENZIONE:NON METTERE IN FUNZIONE L'APPARECCHIO SE NON E'FISSATO AL SUPPORTTO

MARKING OF PORTS KENNZEICHNUNG DER ANSCHLUESSE MARQUAGE DES ORIFICES MARCATURA DEGLI ORIFIZI			
11	AIR INLET VORRATSLEITUNG ALIMENTATION AIR ALIMENTAZIONE ARIA	31	AIR EXHAUST ENTLUEFTUNG ECHAPPEMENT SCARICO
1-4	OIL INLET OELZUFLUSS ALIMENTATION HUILE ALIMENTAZIONE OLIO	32	BLEED SCREW ENTLUEFTUNGSSCHRAUBE VIS DE PURGE VITE DI SPURGO

TORQUE FOR CONNECTIONS ANZUGSMOMENT FUER ANSCHLUESSE COUPLE DE SERRAGE DES RACCORDS COPPIA DI SERRAGGIO DEI RACCORDI	* 25 N.m MAX *** 53 N.m MAX

SYMBOL
SYMBOL
SYMBOLE
SIMBOLO

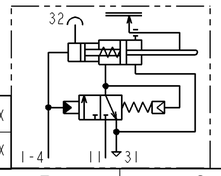

General Specification: JED-334-0					
Further Technical Data: 970 051 307 0					
Doc. Code: 035		Sheet: 1 To 3			
General Tolerances JED-261					
Class 1)	Range of Nominal Dimensions (± mm) ≤ 50	> 50 ≤ 180	> 180 ≤ 400	> 400	∢
Fine	0.5	1.0	1.5	2.0	
Medium X	1.0	2.0	3.0	4.0	±3°
Coarse	2.0	3.5	5.0	6.5	
Tapped Holes acc. ISO 4039 / JED-152					
1) Tolerance Class Applied Crossmarked					

© Copyright WABCO®

Date	Signature
Drawn 2013-12-10	SWAMINATHAN
Checked 2014-01-06	Klueck
Expert AJAY	

WABCO

CLUTCH SERVO
KUPPLUNGSVERSTAERKER
SERVO DEBRAYAGE
SERVO FRIZIONE

Mass	Scale	Material No.	Date of first issue		
2.7 KG	1:1	970 051 457 0	Doc.Code 005	Language ML	Sheet 1/2
Size A 1	CAD System Pro/E				

ECN-No.	Revision	Techn. Resp.	Replacement for
163460	2x D	5630	884 001 888 0

100mm

Tutti Comunicazione o riproduzione di questo documento, tutto sfruttamento o comunicazione del suo contenuto sono interdetti, salvo autorizzazione espressa. Ogni violazione costituisce un illecito che obbliga al risarcimento dei danni subiti.

Tout Communication ou reproduction de ce document, toute exploitation ou communication de son contenu sont interdites, sauf autorisation expresse. Tout manquement à cette règle constitue un délit et expose son auteur au versement de dommages et intérêts.

Alle Rechte für den Fall der Patenterteilung oder Gebrauchsmustereintragung vorbehalten.

Note e permesso consegnare a terzi o riprodurre questo documento, ne utilizzare il contenuto o renderlo conosciuto ad altri. Ogni violazione costituisce un illecito che obbliga a risarcire i danni arrecati. Tutti i diritti riservati.

Copying of this document and giving it to others and the use or communication of its contents thereof, are forbidden without express authority. Contravention of this restriction will constitute an evident delict and result in a liability to the payment of damages. All rights granted in the event of the grant of patent or registration of a utility model or design. This document is the subject of copyright.

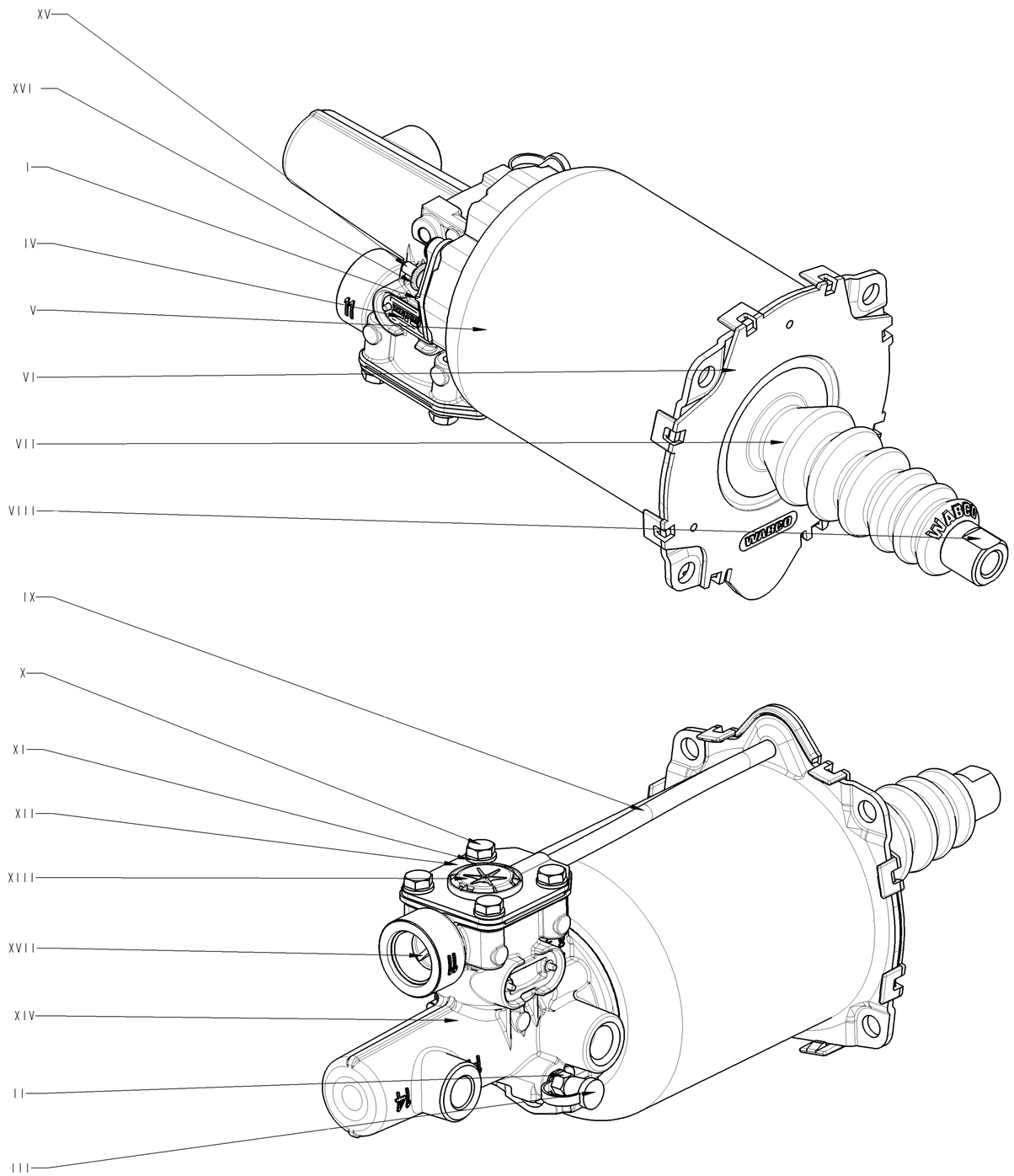

ITEM REPERE	MATERIAL MATIERE		SURFACE PROTECTION PROTECTION DE SURFACE	
I	JED-775-6	PPA,reinforced		
II	JED-020-M	STEEL	JED-256-0	PASSIVAT. Zn-ALLOY-STEEL
III	JED-670	TPE, 75 SHORE A, -40°C	JED-240-5	PAINT. STEEL PART
IV	JED-077-1	HIGH-GRADE ALUMINIUM	JED-007-1	Anodic Oxidation
V	JED-021M3	Thin Sheet,unalloyed Stee	JED-240-5	Paint, steel parts
VI		PP 30% GF BLACK		
VII	JED-376-4	EPDM, 60 IRHD, -40°C		
VIII	JED-020-1	Free-Cutting Steel	JED-256	PASSIVAT. Zn-ALLOY-STEEL
IX		PA 12 PHLY BLACK		
X	JED-051M4	STEEL.SCREWS&NUTS,CL.8.8	JED-378	Inorg.Coating ZN/AL
XI	JED-048M1	STEEL STRIP FOR SPRINGS	JED-378	Inorg.Coating ZN/AL
XII	JED-021M1	Thin sheet,unalloyed stel	JED-256	PASSIVAT. Zn-ALLOY-STEEL
XIII	JED-534-2	PA 6.6, 30% GLASS FIBRES		
XIV	JED-029M1 (C)	AL-PRESSURE DIE CASTING	JED-259-1 (C)	Chromating of Al-alloys
XV	JED-028M	Wrought aluminium alloy	JED-008	Hard anodic oxidation
XVI		Z6 CN 18-9 Stainless steel		
XVII	JED-018M	Plastic (PA 6.10)		

Toute Communication ou reproduction de ce document, toute exploitation ou communication de son contenu sont interdites, sauf autorisation expresse. Tout manquement à cette règle constitue un délit, évident et expose son auteur au versement de dommages et intérêts. Nous nous réservons le droit de déposer tous brevets, modèles, marques et dessins.

Weitergabe sowie Vervielfältigung dieser Unterlage, Verwertung und Mitteilung ihres Inhalts nicht gestattet, soweit nicht ausdrücklich zugestanden. Zuwiderhandlungen stellen eine Schadensersatzpflicht. Wir behalten uns das Recht der Patentanmeldung oder Gebrauchsmustereintragung vor.

Non è permesso consegnare a terzi o riprodurre questo documento, né utilizzarne il contenuto o renderlo comunque noto a terzi senza autorizzazione espressa. Ogni violazione costituisce un illecito doloso e comporterà il risarcimento dei danni subiti.

Copying of this document and giving it to others and the use or communication of the contents thereof, are forbidden without express authority. Contravention of this restriction will constitute an evident abuse and result in a liability to the payment of damages. All rights are reserved in the event of the grant of a patent, registration of a utility model or design. We reserve the right to register.

General Specification: JED-334-0						
Further Technical Data: 970 051 307 0						
Doc. Code: 035			Sheet: 1 To 3			
General Tolerances JED-261						
Class 1)	Range of Nominal Dimensions (± mm)					
		≤ 50	> 50 ≤ 180	> 180 ≤ 400	> 400	
Fine		0.5	1.0	1.5	2.0	±3°
Medium	X	1.0	2.0	3.0	4.0	
Coarse		2.0	3.5	5.0	6.5	
Tapped Holes acc. Tapped Holes acc. ISO 4039 / JED-192						
1) Tolerance Class Applied Crossmarked						

Copyright WABCO®

Date	Signature
Drawn	
2013-12-10	Rossard
Checked	
2014-01-06	Klueck
Expert	
Saunier	

WABCO

CLUTCH SERVO
KUPPLUNGSVERSTAERKER
SERVO DEBRAYAGE
SERVO FRIZIONE

Mass	Scale	Material No.	Date of first issue: 2006-06-29		
2.7 KG	1,000	970 051 457 0	Doc.Code	Language	Sheet
			005	ML	2/2
Size	CAD System				
A 1	Pro/E				

ECN-No.	Revision	Techn. Resp.	Replacement for
163460	D	5630	884 001 888 0

100mm