◁▷	SAFETY CHARACTERISTICS	0
◁▷	SIGNIFICANT CHARACTERISTICS	1
◁I▷	CUSTOMER INTERFACE	0

ASSEMBLY PROCEDURE

(a)

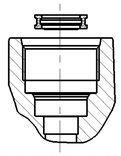

THE SPRING ELEMENT IS INSERTED INTO THE CHAMBER UNDER THE THREAD ROOT OF THE CONNECTION BORE (a) AND (b).

(b)

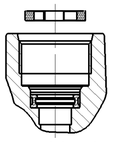

THE RETAINING CLIP IS INTRODUCED SO THAT IT RESTS FLAT ON THE THREAD ROOT (b) AND (c).
THE SPRING ELEMENT AND RETAINING CLIP ARE SYMMETRICAL.

(c)

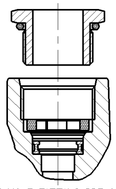

THE MALE FITTING PRE-ASSEMBLED WITH THE PRE-GREASED O-RING TO SEAL THE THREAD IS SCREWED BY HAND INTO THE TAPPED BORE (c) AND TIGHTENED.

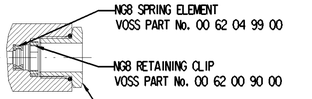

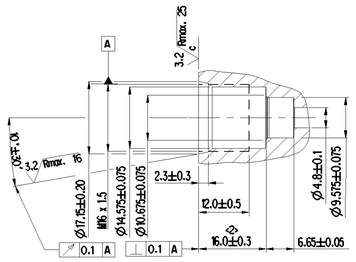

DETAILS OF PORT MACHINING FOR M16x1.5

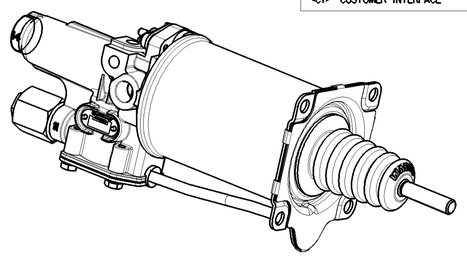

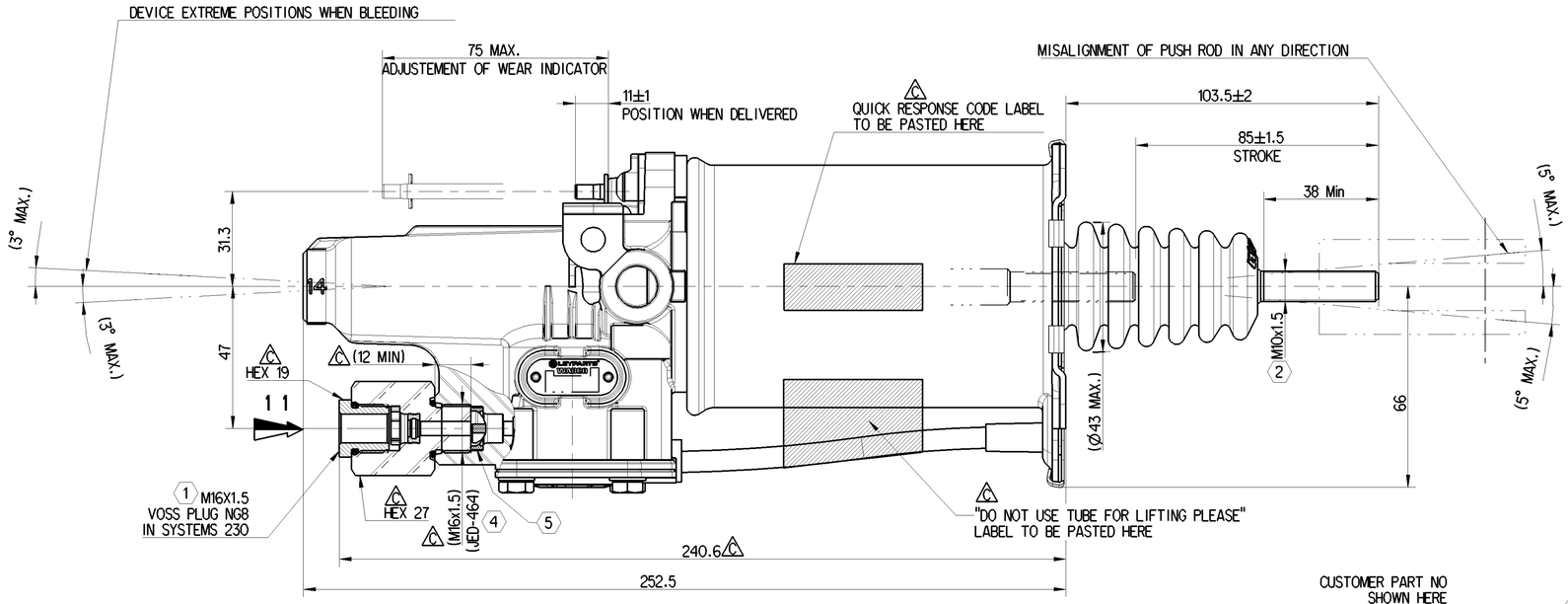

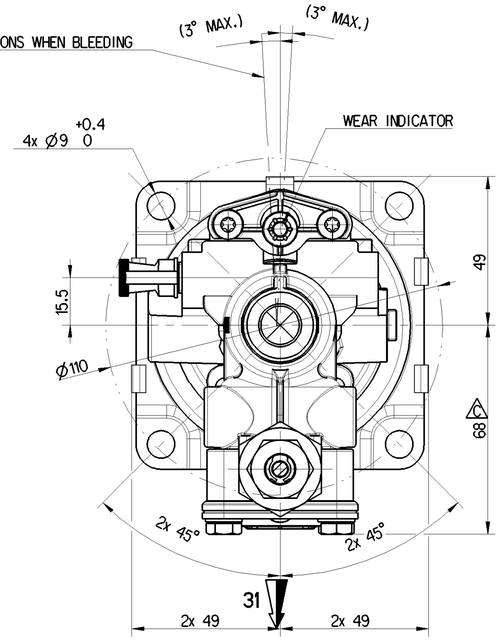

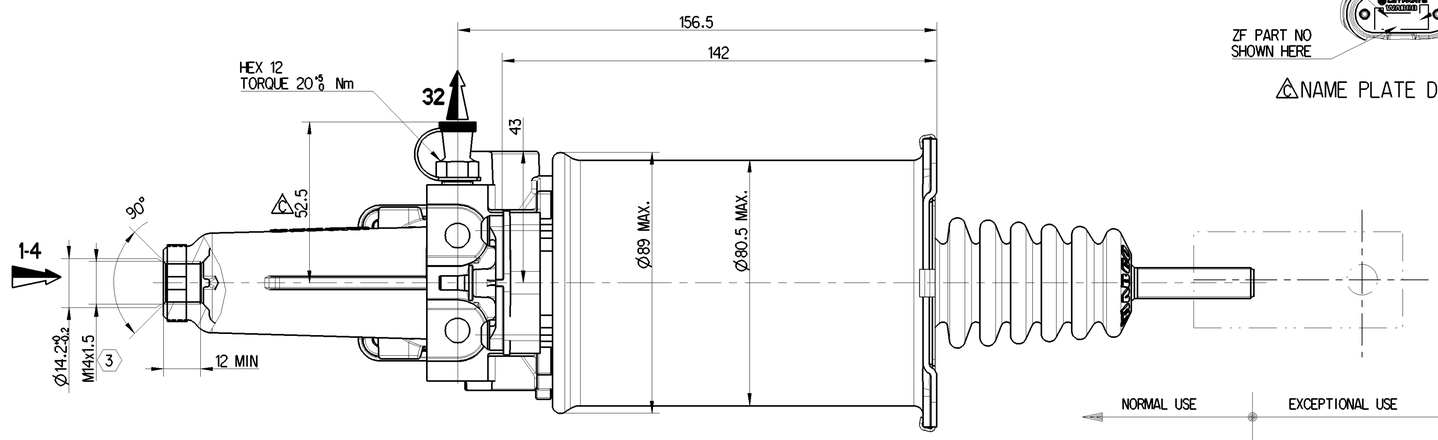

NAME PLATE DETAILS

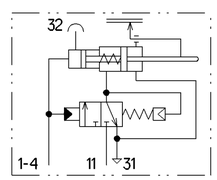

SYMBOL

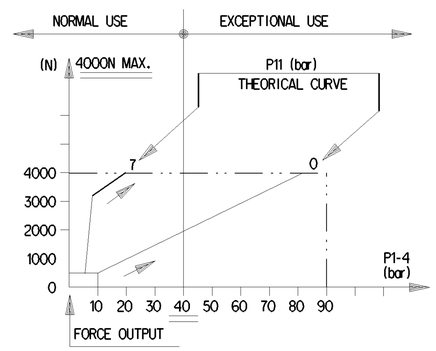

SIGNIFICANT CHARACTERISTICS (1x)

6 NAME PLATE COLOR - BLACK

SI No.	NOTES	
1	PRODUCT SPECIFICATION No.	PS 9700514940
2	OIL VOLUME INPUT	V=(SHxC)+K
	K ABSORPTION AT 90 bar for C=0	K<1.5 cm³
	SH HYDRAULIC SECTIONAL AREA	4.89 cm²
	C GEAR DISENGAGING STROKE	
3	HYDRAULIC FLUID	BRAKE FLUID SAE J 1703
4	THERMAL RANGE	-40°C..+100°C
5	SUPPLY PRESSURE	10 bar MAX.
6	NO STROKE LIMITER IN THE DEVICE	
7	OPEN PORTS ARE FITTED WITH CLOSURE PLUG FOR STORAGE AND TRANSIT PURPOSE	
8	CAUTION : DO NOT ACTUATE THE DEVICE IF NOT FITTED ON ITS MOUNTING BRACKET	

MARKING OF PORTS	
11	AIR INLET
1-4	OIL INLET
31	AIR EXHAUST
32	BLEED SCREW

TORQUE FOR CONNECTIONS	
1	10±1 Nm
2	19±2 Nm
3	22.5±2.5 Nm
4	31.5±2.5 Nm

5 AIR FILTER

General Specification: ISO 8015, JED-334-1, Size ISO 14405 LP
Further Technical Data: 970 051 435 0
Doc. Code: 035 Sheet: 1 To 5
General Tolerances JED-261

Class 1)	Range of nominal dimensions in mm ≤ 50	> 50 ≤ 180	> 180 ≤ 400	> 400	◁
Fine	±0.5	±1	±1.5	±2	±3°
Medium	±1	±2	±3	±4	
Coarse	±2	±3.5	±5	±6.5	

Tapped Holes acc.
1) Tolerance Class Applied Crossmarked

Copyright ZF®

	Date	Signature
Drawn	2023-06-26	Sachin
Checked	2023-06-26	A R

Dimensions in mm

CLUTCH SERVO

Mass	Scale	Material No.	Date of first issue: 2012-02-29
1.8 kg	1:1 (1:2)	970 051 494 0	Doc. Code 005 · Language EN · Sheet 1/1
Size A 1	CAD System CREO	ECN-No. 510389 · Revision 14x C · Techn. Resp. 5630	Replacement for /

100mm

Toute Communication ou reproduction de ce document, toute exploitation ou communication de son contenu sont interdites, sauf autorisation écrite. Tous droits de propriété industrielle réservés, notamment en matière de brevets et de modèles.
Weitergabe sowie Vervielfältigung dieser Unterlage, Verwertung und Mitteilung ihres Inhalts nicht gestattet, soweit nicht ausdrücklich zugesichert. Zuwiderhandlungen verpflichten zu Schadenersatz. Alle Rechte für den Fall der Patent-, Gebrauchsmuster- oder Geschmacksmustereintragung vorbehalten.
Non è permesso consegnare a terzi o riprodurre questo documento, né utilizzarne il contenuto o renderlo comunque noto a terzi senza esplicita autorizzazione. Tutti i diritti di proprietà industriale, in particolare quelli di brevetto o di registrazione di modelli, sono riservati.
Copying of this document and giving it to others and the use or communication of the contents thereof, are forbidden without express authority. Offenders are liable to the payment of damages. All rights are reserved in the event of the grant of patent or registration of a utility model or design. This document is the subject of copyright.
Ningún tercero puede copiar o reproducir este documento, ni utilizar su contenido o revelarlo a terceros sin autorización expresa. Quien lo contravenga está obligado a indemnizar los daños causados. Quedan reservados todos los derechos de propiedad industrial.