SAFETY CHARACTERISTICS	0
SIGNIFICANT CHARACTERISTICS	0

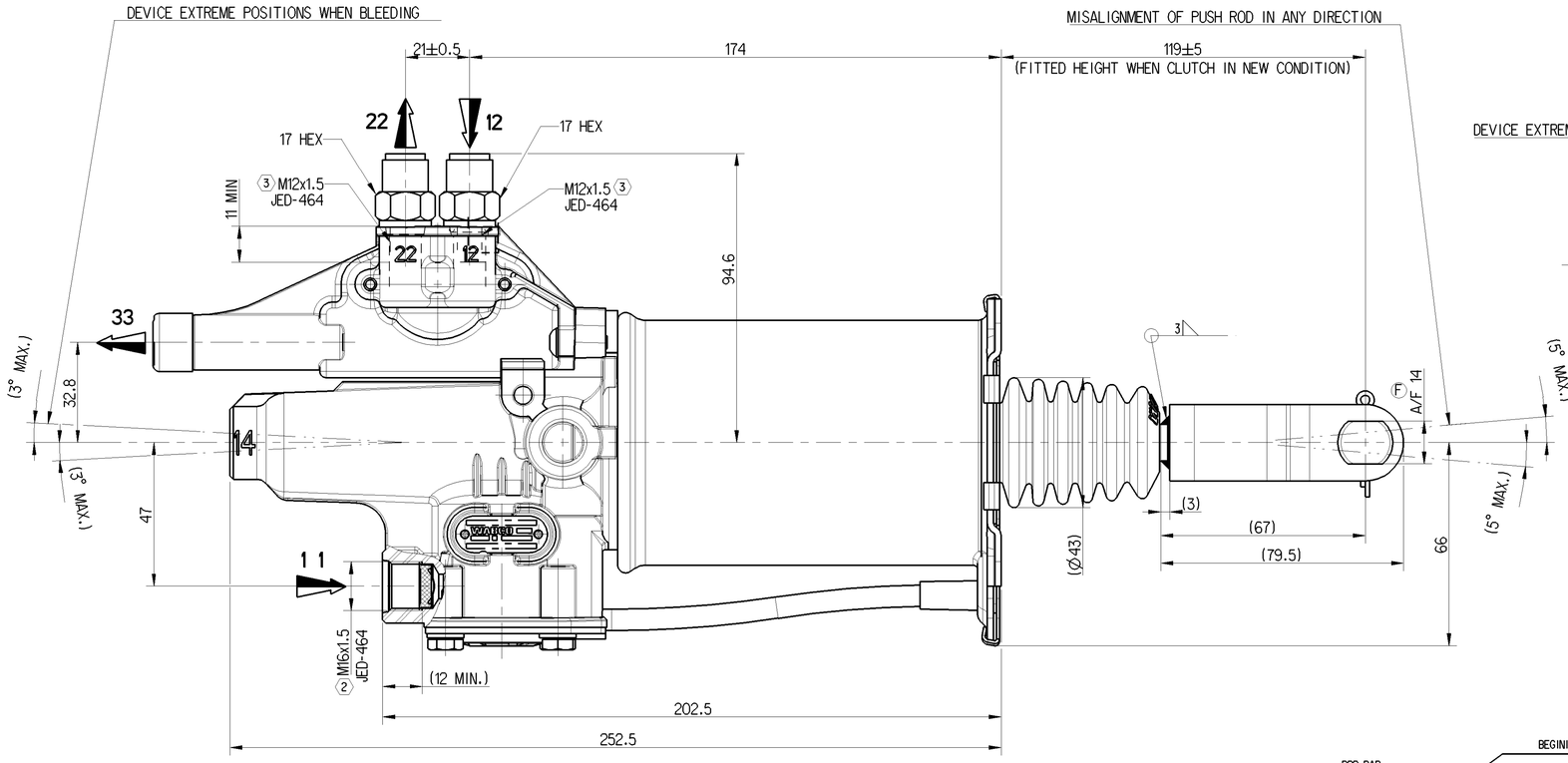

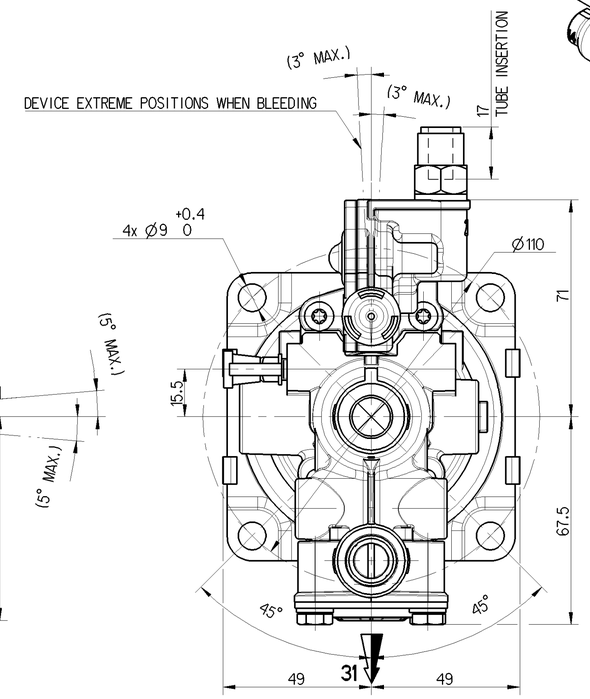

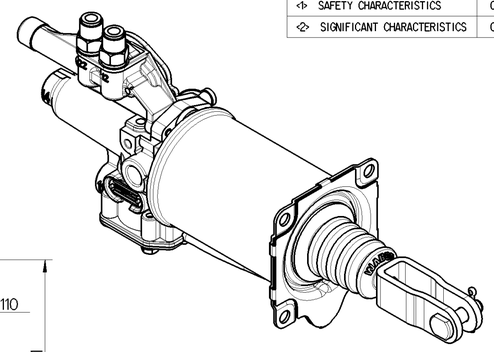

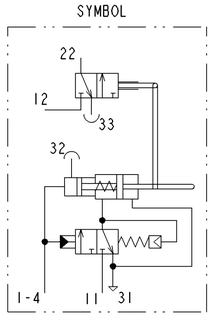

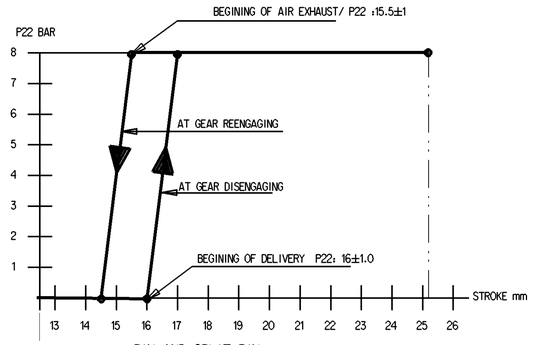

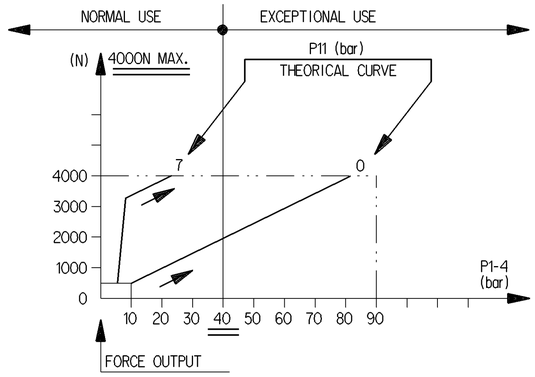

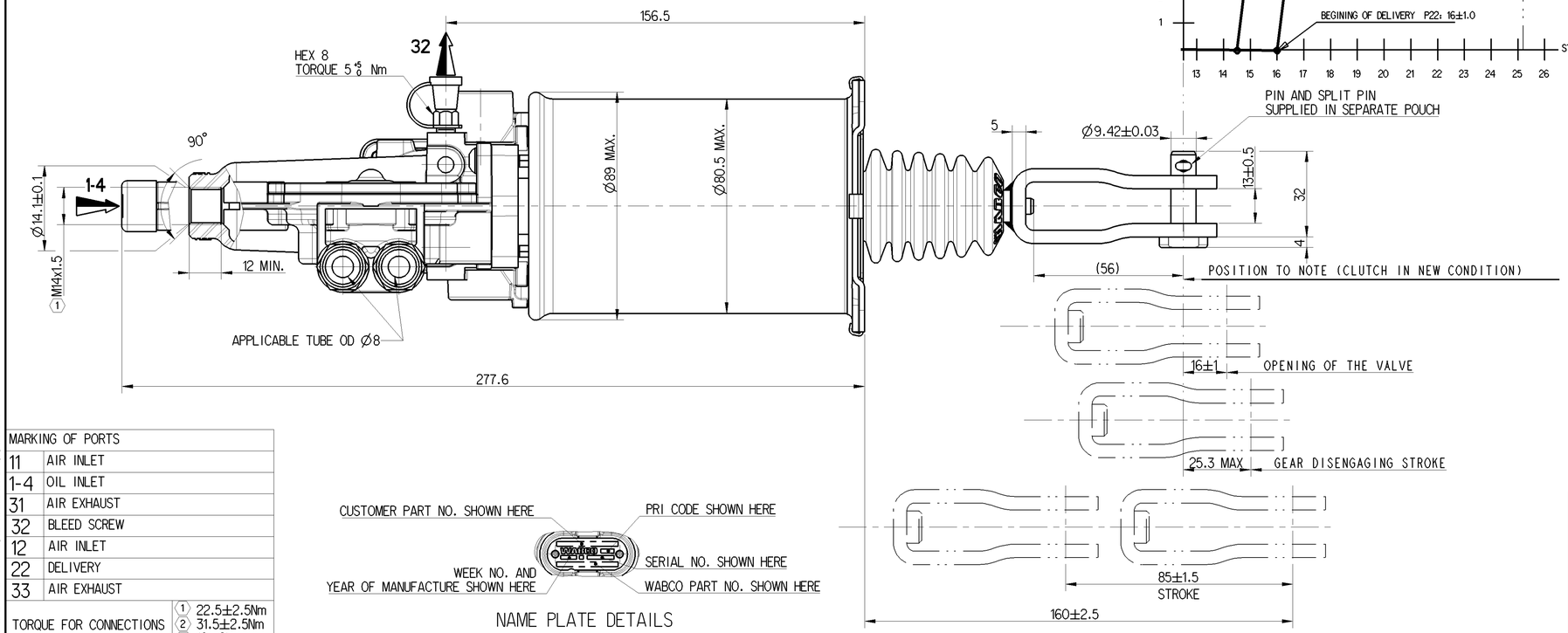

MARKING OF PORTS	
11	AIR INLET
1-4	OIL INLET
31	AIR EXHAUST
32	BLEED SCREW
12	AIR INLET
22	DELIVERY
33	AIR EXHAUST

TORQUE FOR CONNECTIONS	
①	22.5±2.5Nm
②	31.5±2.5Nm
③	19±2Nm

NAME PLATE DETAILS

SI No.		NOTES	
1		PRODUCT SPECIFICATION NO.	970 051 499 0
2		OIL VOLUME INPUT	V=(SHxC)+K
	K	ABSORPTION AT 90 bar for C=0	K<1.5 cm^3
	SH	HYDRAULIC SECTIONAL AREA	4.89 cm^2
	C	GEAR DISENGAGING STROKE	
3		HYDRAULIC FLUID	BRAKE FLUID SAE J 1703
4		THERMAL RANGE	-40°C..+100°C
5		SUPPLY PRESSURE	10 bar MAX.
6		VIBRATION REQUIREMENT	±9g 67hz (JIS D1601)
7		NO STROKE LIMITER IN THE DEVICE	
8		OPEN PORTS ARE FITTED WITH CLOSURE PLUG FOR STORAGE AND TRANSIT PURPOSES	
9		CAUTION : DO NOT ACTUATE THE DEVICE IF NOT FITTED ON ITS MOUNTING BRACKET	

General Specification: JED-334-1 , Size ISO 14405 LP
Further Technical Data:
Doc. Code: Sheet: To

General Tolerances JED-261

Class 1)	Range of Nominal Dimensions (± mm) ≤ 50	> 50 ≤ 180	> 180 ≤ 400	> 400	∢
Fine	0.5	1.0	1.5	2.0	±3°
Medium	1.0	2.0	3.0	4.0	
Coarse	2.0	3.5	5.0	6.5	

Tapped Holes acc. -
1) Tolerance Class Applied Crossmarked

Copyright WABCO®

Date	Drawn	Checked	Expert
2016-09-13	Maniraj	2016-09-19	Praveen

WABCO

CLUTCH SERVO

Mass	Scale	Material No.	Date of first issue: 2012-05-02		
2.45 KG	1:1	970 051 499 0	Doc.Code 005	Language EN	Sheet 1/1
Size A 1	CAD System CREO	ECN-No. 171897	Revision 1x F	Techn. Resp. 5630	Replacement for /

100mm

Toute Communication ou reproduction de ce document, toute exploitation ou communication de son contenu sont interdites, sauf autorisation écrite. Tous droits de propriété industrielle réservés, notamment en matière de brevets et de modèles.

Non è permesso consegnare a terzi o riprodurre questo documento, né utilizzare il contenuto o renderlo comunque noto a terzi senza autorizzazione scritta. Tutti i diritti di proprietà industriale sono riservati, in particolare quelli di brevetto o di registrazione di un modello d'uso.

Weitergabe sowie Vervielfältigung dieser Unterlage, Verwertung und Mitteilung ihres Inhalts nicht gestattet, soweit nicht ausdrücklich zugestanden. Zuwiderhandlungen verpflichten zu Schadenersatz. Alle Rechte für den Fall der Patent-, Gebrauchsmuster- oder Geschmacksmustereintragung vorbehalten.

Copying of this document and giving it to others and the use or communication of the contents thereof, are forbidden without express authority. Offenders are liable to the payment of damages. All rights are reserved in the event of the grant of patent or registration of a utility model or design. This document is the subject of copyright.