◁▷ SAFETY CHARACTERISTICS	0
◇ SIGNIFICANT CHARACTERISTICS	0
<I> CUSTOMER INTERFACE	0

ASSEMBLY PROCEDURE

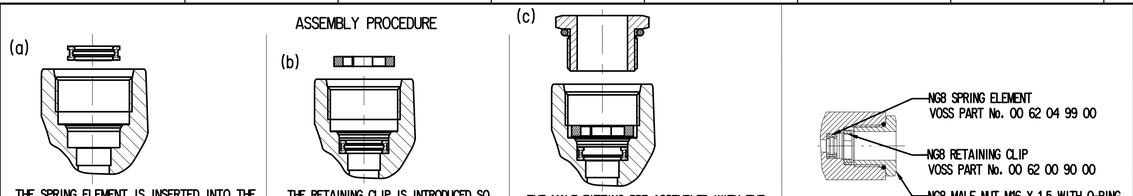

THE SPRING ELEMENT IS INSERTED INTO THE CHAMBER UNDER THE THREAD ROOT OF THE CONNECTION BORE (a) AND (b).

THE RETAINING CLIP IS INTRODUCED SO THAT IT RESTS FLAT ON THE THREAD ROOT (b) AND (c).
THE SPRING ELEMENT AND RETAINING CLIP ARE SYMMETRICAL.

THE MALE FITTING PRE-ASSEMBLED WITH THE PRE-GREASED O-RING TO SEAL THE THREAD IS SCREWED BY HAND INTO THE TAPPED BORE (c) AND TIGHTENED.

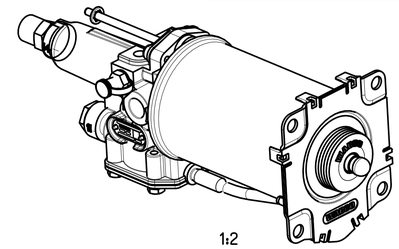

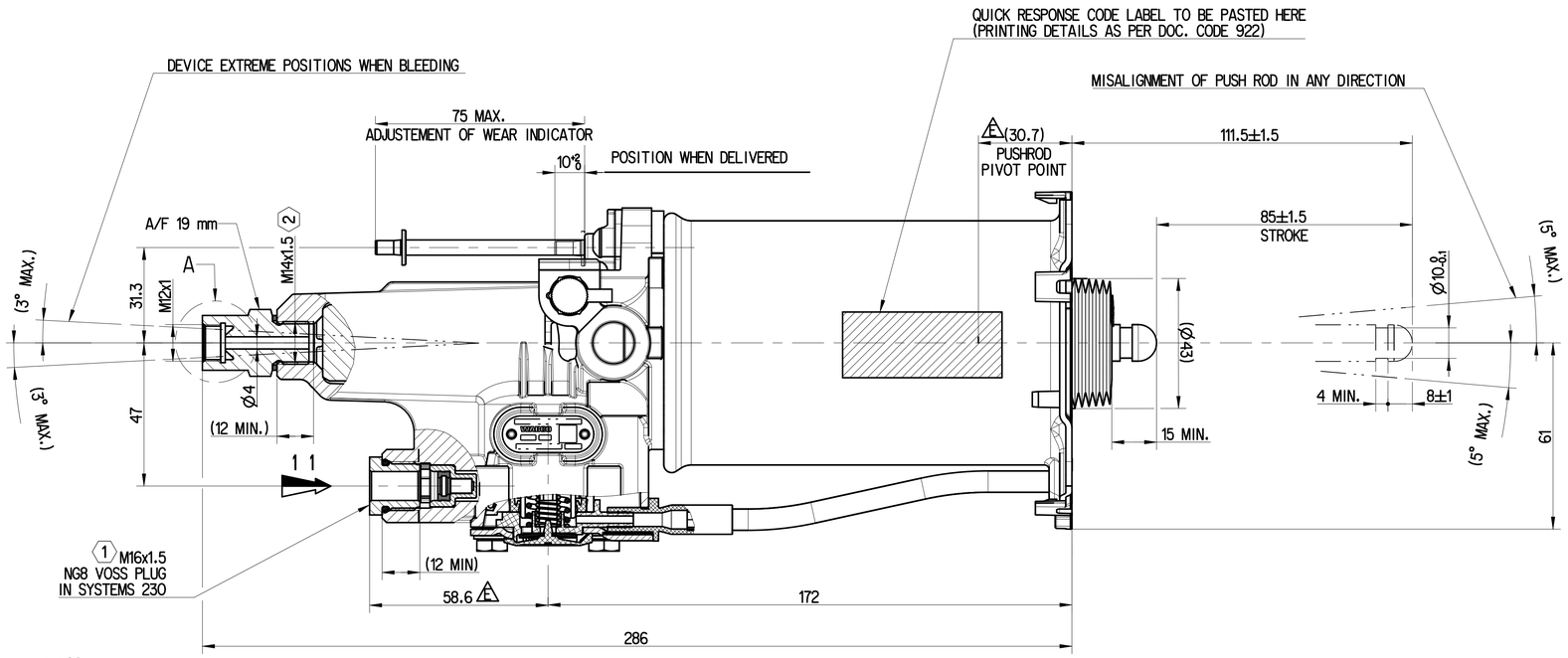

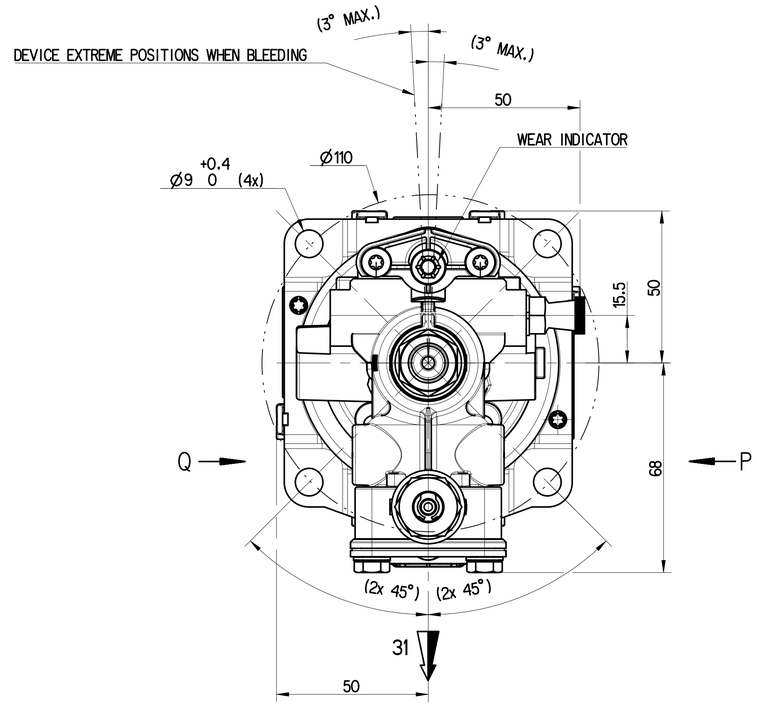

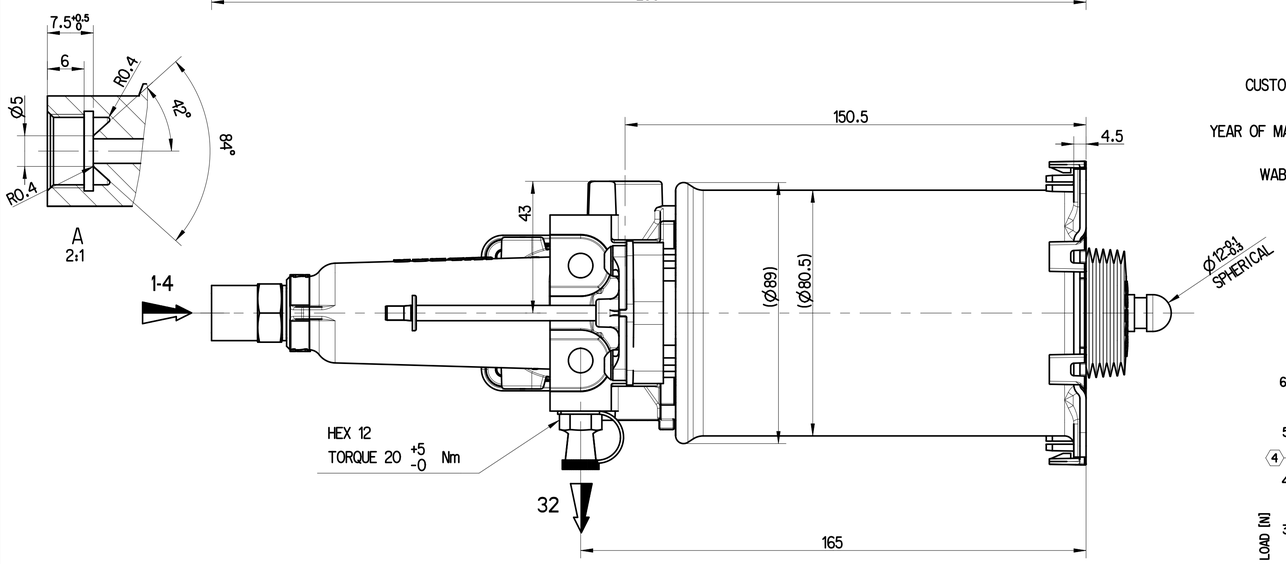

CUSTOMER	CUSTOMER PART NUMBER
VECV	ID314479

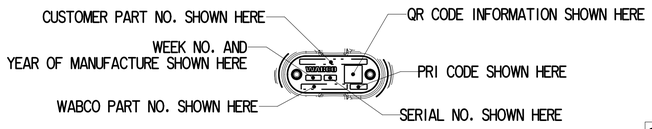

NAME PLATE DETAILS

VIEW P

	SI No.	NOTES	
E	1	PRODUCT SPECIFICATION No.	PS 970 051 620 0
	2	OIL VOLUME INPUT	V=(SHxC)+K
		K ABSORPTION AT 90 bar for C=0	K<1.5 cm^3
		SH HYDRAULIC SECTIONAL AREA	4.89 cm^2
		C GEAR DISENGAGING STROKE	
	3	HYDRAULIC FLUID	BRAKE FLUID SAE J 1703
E	4	THERMAL RANGE	-10°C..+100°C
	5	SUPPLY PRESSURE	10 bar MAX.
	6	NO STROKE LIMITER IN THE DEVICE	
	7	CAUTION : DO NOT ACTUATE THE DEVICE IF NOT FITTED ON ITS MOUNTING BRACKET	
	8	OPEN PORTS ARE FITTED WITH CLOSURE PLUG FOR STORAGE AND TRANSIT PURPOSE	
E	9	SPRING PRE-LOAD AT SUPPLY CONDITION = 47±15 Nm SPRING STIFFNESS = 1 N/mm	
E	10	PERMISSIBLE LEAKAGE AT 23°+2 -5	

LEAKAGE TYPE		NEW Vn<	USED Vn<
HYDRAULIC (AT 120 bar)		0.1cc/min	0.1cc/min
PNEUMATIC	ENGAGED	8cc/min	50cc/min
	DISENGAGED	25cc/min	200cc/min

MARKING OF PORTS	
11	AIR INLET
1-4	OIL INLET
31	AIR EXHAUST
32	BLEED SCREW

TORQUE FOR CONNECTIONS: (1) 10±1 Nm; (2) 22.5±2.5 Nm

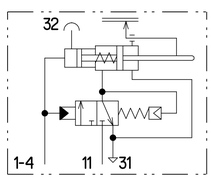

SYMBOL

CUSTOMER LOGO DETAIL (1)

VIEW Q

MARKED ACCORDING TO STD 5051,16

(1) MET 3.2-30-D15

E PERFORMANCE GRAPH

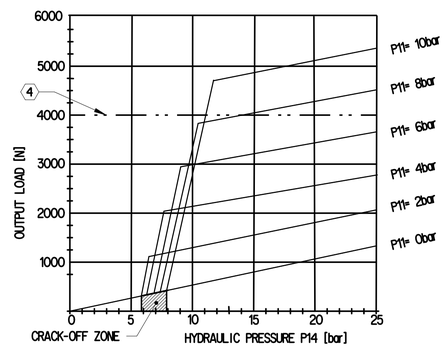

(4) - MAXIMUM PERMISSIBLE OUTPUT LOAD
CRACK-OFF PRESSURE 6.9±1 bar WHEN P11 = 7bar

General Specification: ISO 8015, JED-334-1, Size ISO 14405 LP
Further Technical Data: 970 051 620 0
Doc. Code: 035 — Sheet: 1 To 5
General Tolerances JED-261

Class 1)	Range of nominal dimensions in mm ≤ 50	> 50 ≤ 180	> 180 ≤ 400	> 400	◁
Fine	±0.5	±1	±1.5	±2	
Medium	±1	±2	±3	±4	±3°
Coarse	±2	±3.5	±5	±6.5	

Tapped Holes acc. IS 14962
1) Tolerance Class Applied Crossmarked

Copyright ZF®

	Date	Signature
Drawn	2024-12-24	Sachin
Checked	2024-12-24	A R

CLUTCH SERVO

Dimensions in mm

Mass	Scale	Material No.	Date of first issue: 2013-08-19
2.1 kg	1:1	970 051 619 0	Doc.Code 005 / Language EN / Sheet 1/1

Size	CAD System	ECN-No.	Revision	Techn. Resp.	Replacement for
A 1	CREO	516635	7x E	5630	-

100mm

Tutte Comunicazioni o riproduzione di questo documento, tutto sfruttamento o comunicazione del suo contenuto sono interdetti, salvo autorizzazione scritta. Tutti i diritti di proprietà industriale riservati, soprattutto in materia di brevetti o di modelli.
Weitergabe sowie Vervielfältigung dieser Unterlage, Verwertung und Mitteilung ihres Inhalts nicht gestattet, soweit nicht ausdrücklich zugestanden. Zuwiderhandlungen verpflichten zu Schadenersatz. Alle Rechte vorbehalten für den Fall der Patent- oder Gebrauchsmustereintragung vorbehalten.
Non è permesso consegnare a terzi o riprodurre questo documento, né utilizzare il contenuto o renderlo comunque noto a terzi senza esplicita autorizzazione. Ogni violazione comporta il risarcimento dei danni. È riservata la facoltà di brevetti o modelli.
Copying of this document and giving it to others and the use or communication of the contents thereof, are forbidden without express authority. Offenders are liable to the payment of damages. All rights are reserved in the event of the grant of patent or registration of a utility model or design. This document is the subject of copyright.