<1> SAFETY CHARACTERISTICS	0
<2> SIGNIFICANT CHARACTERISTICS	0
<CI> CUSTOMER INTERFACE	9

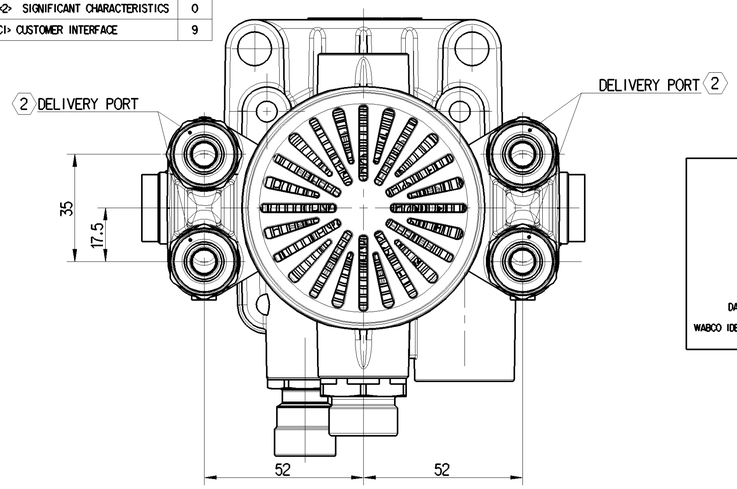

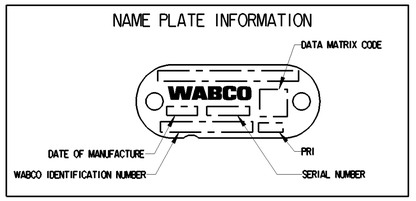

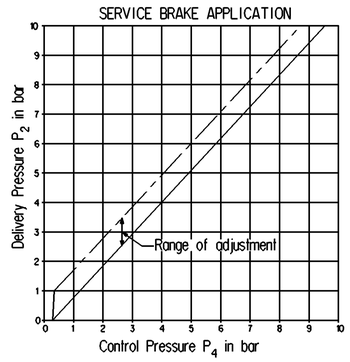

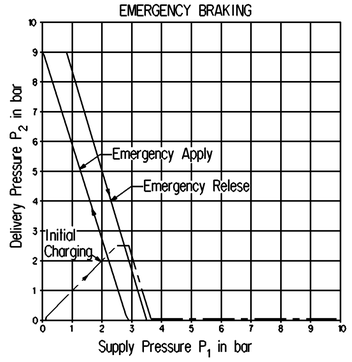

	WORKING MEDIUM	AIR
	THERMAL RANGE OF APPLICATION	-40° TO +65°C
	SHORT TERM RESISTANCE TO HEAT	MAX. 1h AT 110°C
	NOMINAL WORKING PRESSURE	9 bar
	MAXIMUM WORKING PRESSURE	10 bar
	PREDOMINANCE ADJUSTMENT RANGE PRESSURE	0 TO 0.7 bar
	FILLING CRACK-OFF	0.5 bar MAX.
	RELAY RATIO	>1
	CRACK-OFF PRESSURE (WITHOUT PREDOM)	0.3 bar MAX. (+65°C TO -20°C) 0.35 bar MAX. (-20°C TO -40°C)
	INSTALLATION POSITION	VERTICAL ±60° ALLOWED
PORT DESIGNATION	1	SUPPLY PORT
	1-2	RESERVOIR PORT
	2 (4x)	DELIVERY PORT
	4	CONTROL PORT
	TIGHTENING TORQUE FOR MOUNTING BOLTS	45±2 Nm

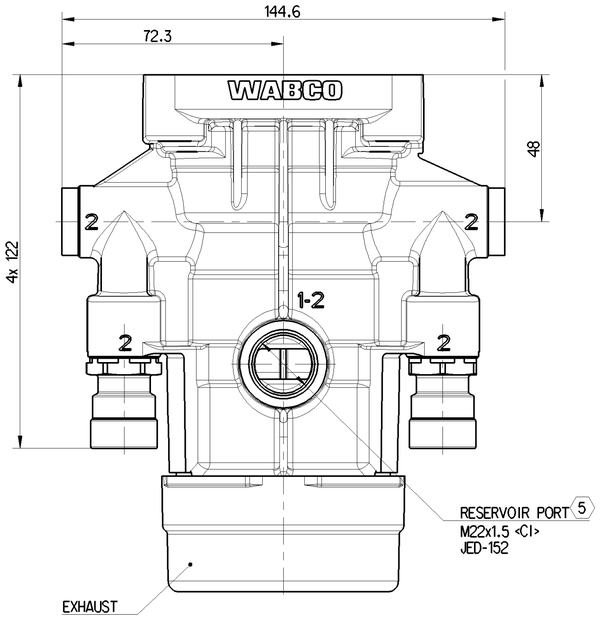

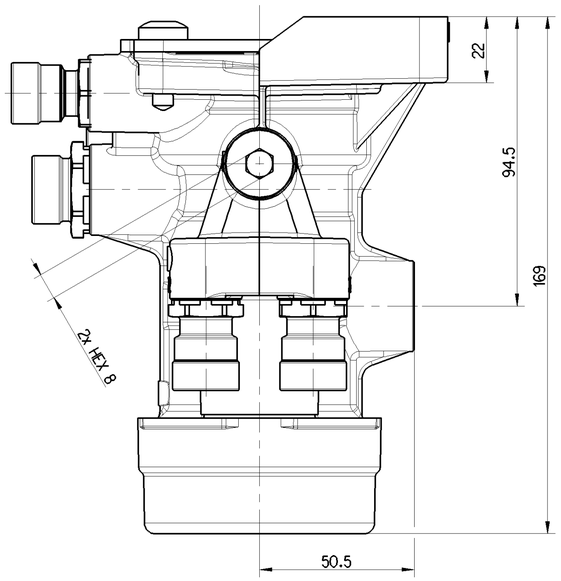

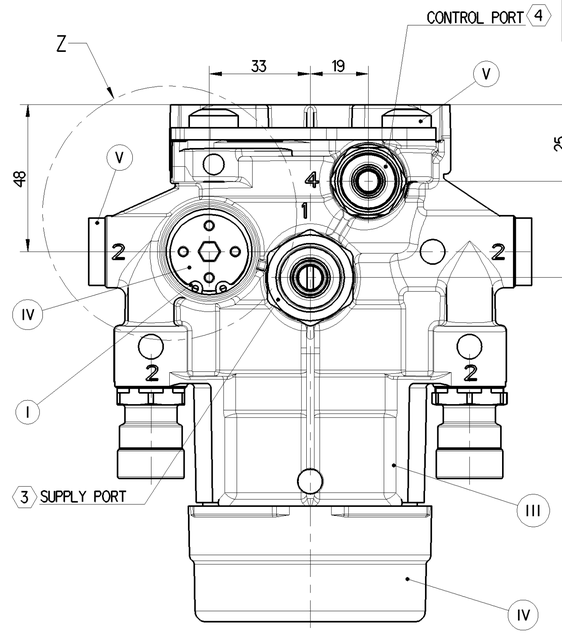

CONDITION	FROM	TO	NOMINAL DIAMETER
FILLING	PORT 1	PORT 1-2	≥10 mm
BRAKING	PORT 1-2	PORT 2	≥11.5 mm
EXHAUSTING	PORT 2	PORT 3	≥10.6 mm

PART CODE	MATERIAL	SURFACE PROTECTION
V	STEEL	ZINC NICKEL PLATED
IV	PLASTIC	NO TREATMENT
III	ALUMINIUM ALLOY	CHROMATED
II	STEEL	POWDER COATED
I	STEEL	ZINC PLATED

NOTE:

1 PREDOMINANCE ADJUSTMENT

FITTING DETAILS:

2 TUBE SIZE-12x1.5 <CI>, PUSH IN LENGTH -25mm <CI>
HEX 22, THREAD-M16x1.5, TIGHTENING TORQUE 30 TO 35 Nm

3 TUBE SIZE-12x1.5 <CI>, PUSH IN LENGTH -25mm <CI>
HEX 28, THREAD-M22x1.5, TIGHTENING TORQUE 34 TO 40 Nm

4 TUBE SIZE-10x1 <CI>, PUSH IN LENGTH -24mm <CI>
HEX 22, THREAD-M16x1.5, TIGHTENING TORQUE 30 TO 35 Nm

RECOMMENDED TORQUE FOR FITTINGS:

5 THREAD-M22x1.5, TIGHTENING TORQUE: 34 TO 40 Nm

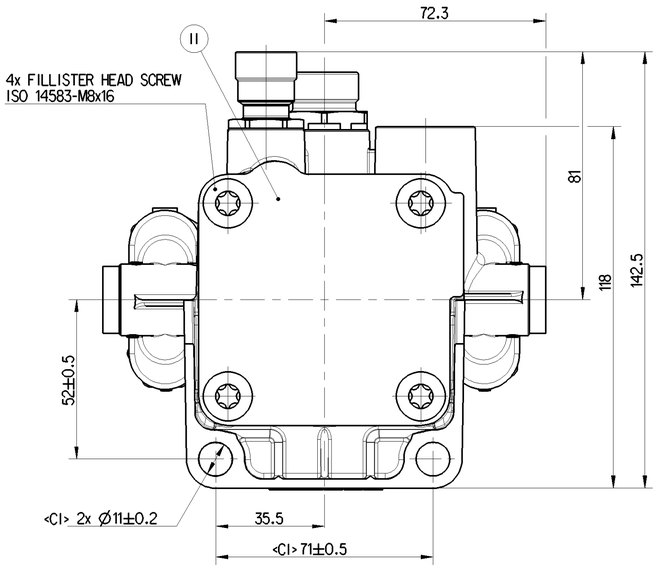

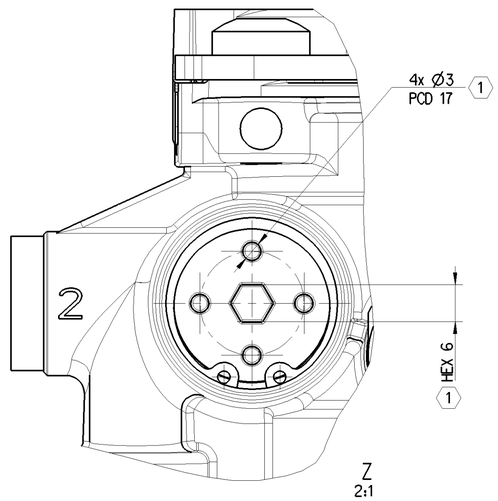

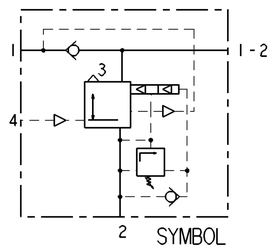

General Specification: JED-334-1 , Size ISO 14405 LP					
Further Technical Data: 971 002 049 0					
Doc. Code: 035	Sheet: 1	To	56		
General Tolerances JED-261					
Class 1)	Range of Nominal Dimensions (± mm) ≤ 50	> 50 ≤ 180	> 180 ≤ 400	> 400	∢
Fine	0.5	1.0	1.5	2.0	
Medium X	1.0	2.0	3.0	4.0	±3°
Coarse	2.0	3.5	5.0	6.5	
Tapped Holes acc.					
1) Tolerance Class Applied Crossmarked					

Copyright WABCO®

Date	Signature
Drawn 2021-05-31	M S
Checked 2021-07-29	Szyszka
Expert	Ponmurugaraj C

WABCO

RELAY EMERGENCY VALVE
4 PORT
FITTING VARIANT

Mass	Scale	Material No.	Date of first issue: 2019-08-20		
1.584 KG	1:1 2:1	971 002 041 0	Doc.Code 005	Language EN	Sheet 1/1
Size A 1	CAD System CREO	ECN-No. 507805	Revision - A	Techn. Resp. 5250	Replacement for -

100mm

Toute Communication ou reproduction de ce document, toute exploitation ou communication de son contenu sont interdites, sauf autorisation écrite. Tous droits de propriété intellectuelle réservés, notamment en matière de brevets et de modèles.

Weitergabe sowie Vervielfältigung dieser Unterlage, Verwertung und Mitteilung ihres Inhalts nicht gestattet, soweit nicht ausdrücklich zugestanden. Zuwiderhandlungen verpflichten zu Schadenersatz. Alle Rechte für den Fall der Patenterteilung oder Gebrauchsmustereintragung vorbehalten.

Non è permesso consegnare o fare la riproduzione questo documento, né utilizzare il contenuto o renderlo comunque noto a terzi senza autorizzazione scritta. Tutti i diritti di proprietà intellettuale riservati, in particolare quelli di brevetto o di registrazione di un modello di utilità.

Copying of this document and giving it to others and the use or communication of the contents thereof, are forbidden without express authority. Offenders are liable to the payment of damages. All rights are reserved in the event of the grant of patent or registration of a utility model or design. This document is the subject of copyright.