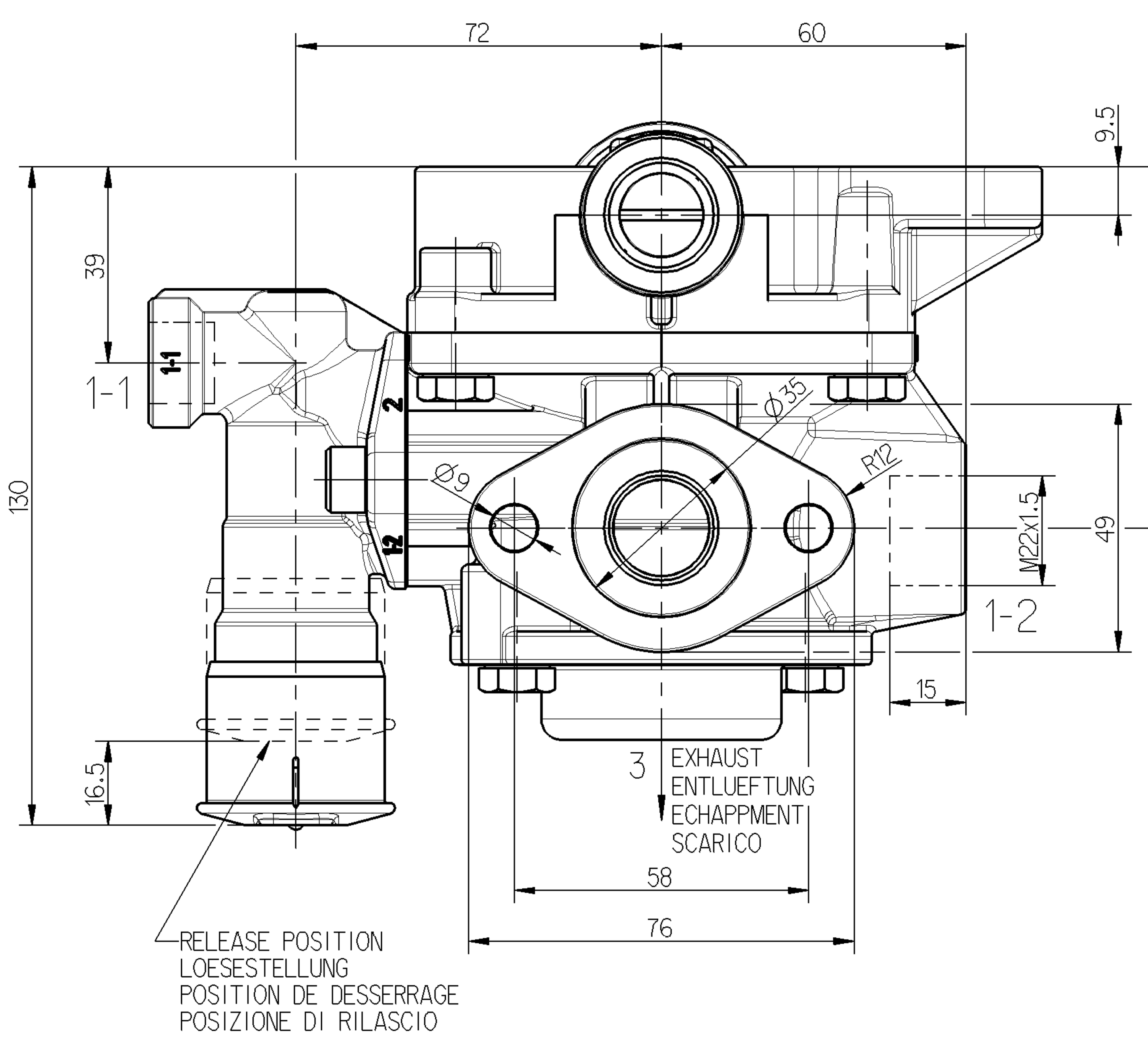

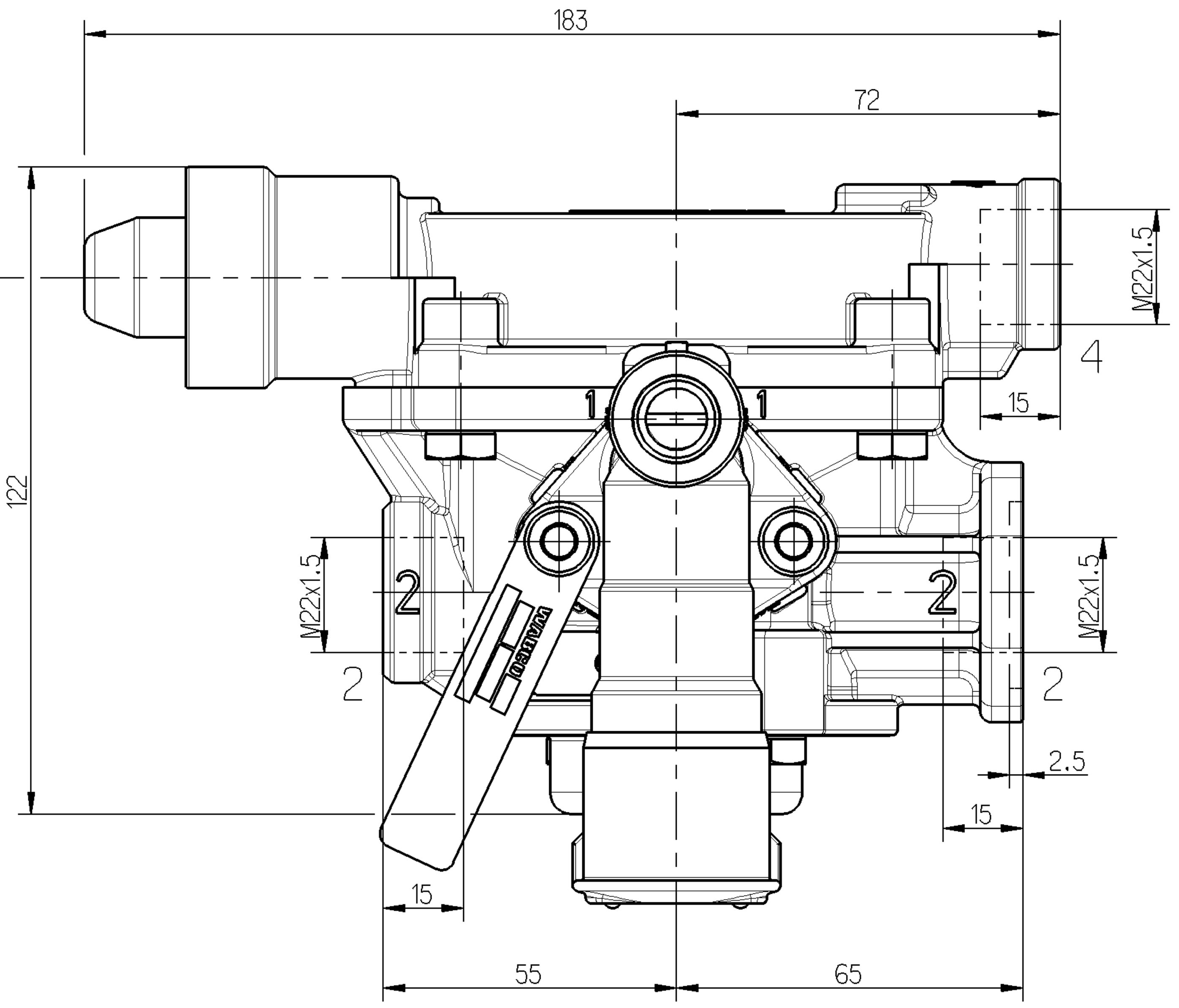

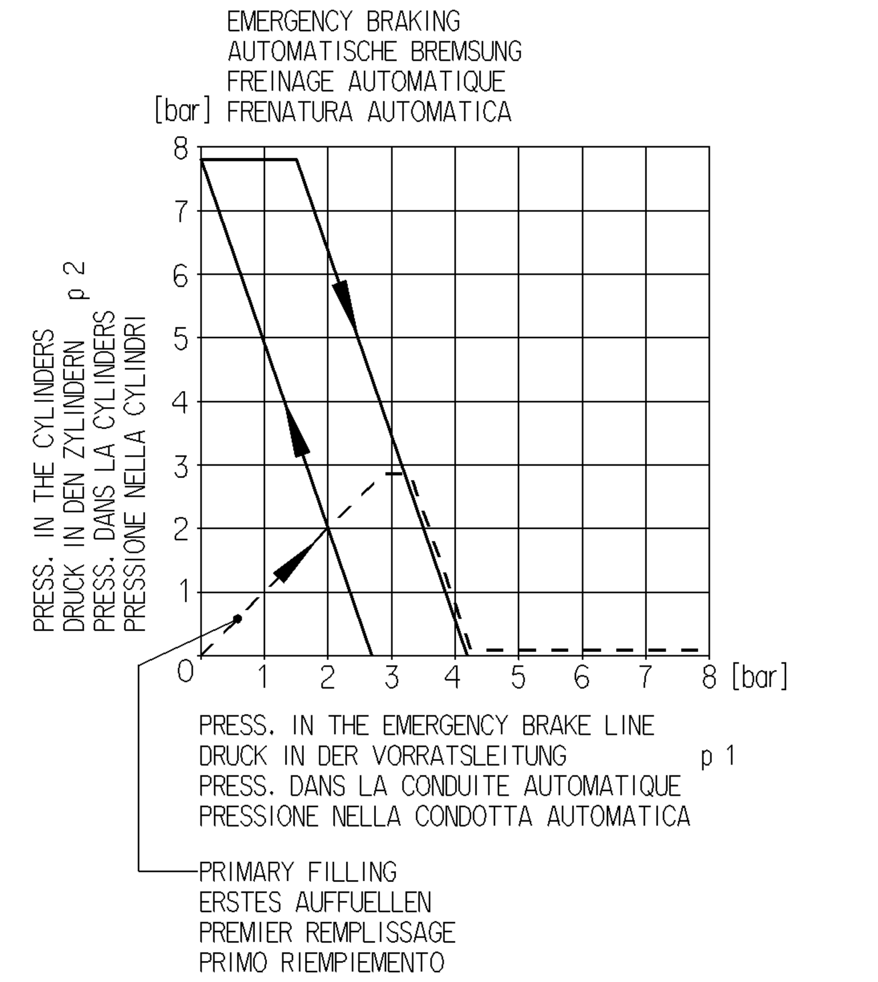

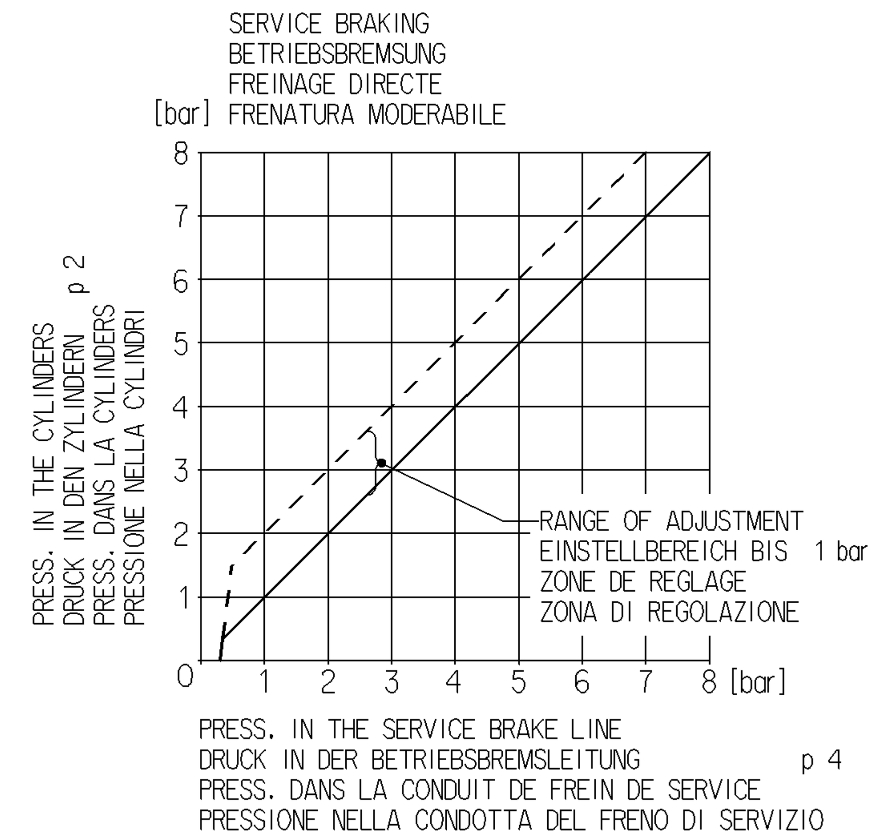

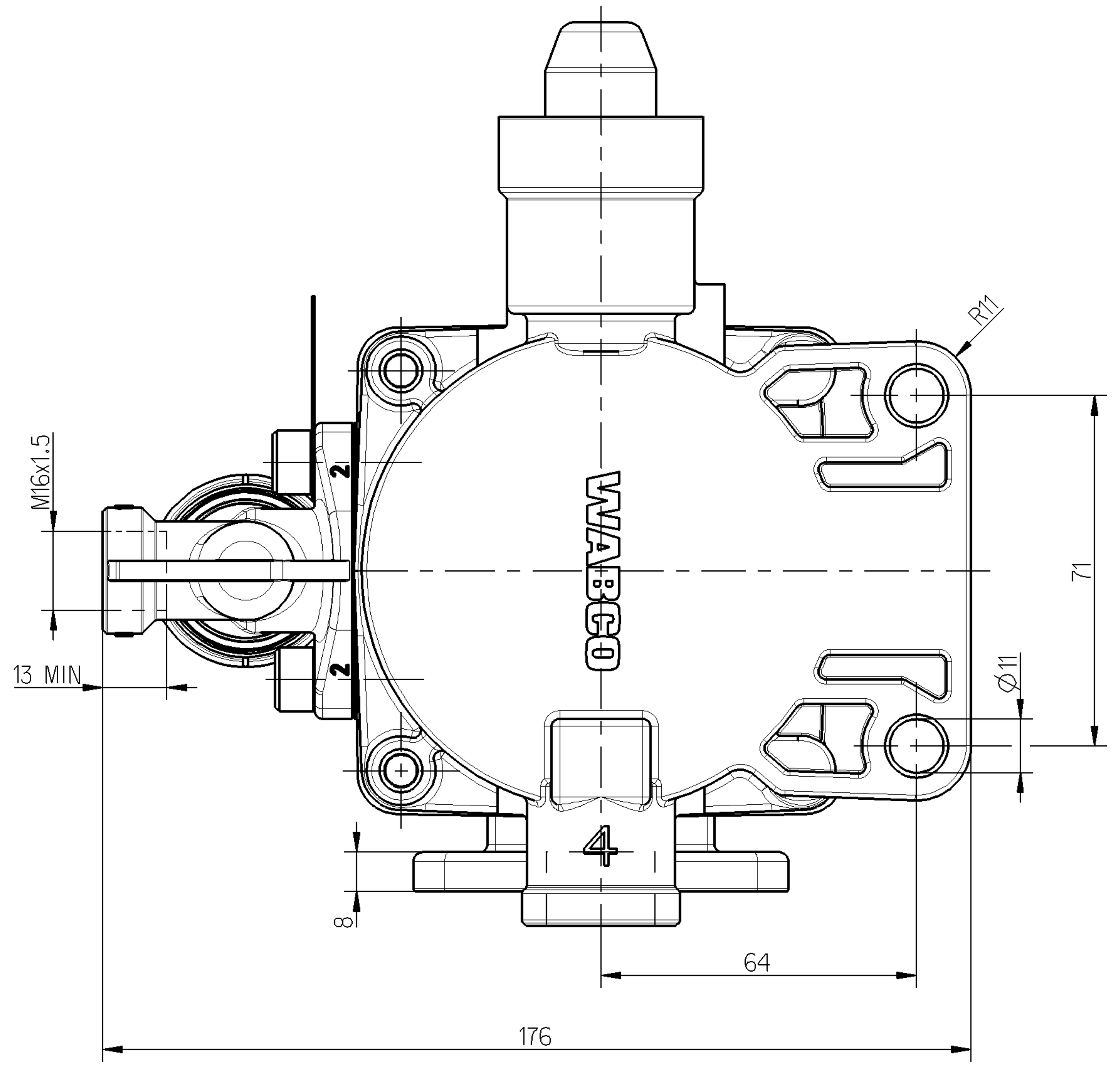

1-2: RESERVOIR SUPPLY PORT
ANSCHLUSS FUER LUFTBEHAELTER (p 1-2)
ORIFICE AU RESERVOIR
ORIFICIO AL SERBATOIO

2: BRAKE CYLINDER PORT
ANSCHLUSS FUER ZYLINDER (p 2)
ORIFICE AUX CYLINDERS
ORIFICIO AL CILINDRI

1-1: PORT FOR EMERGENCY LINE
ANSCHLUSS FUER VORRATSLEITUNG (p 1)
ORIFICE POUR CONDUITE AUTOMATIQUE
ORIFICIO PER LA CONDOTTA AUTOMATICA

4: PORT FOR SERVICE LINE
ANSCHLUSS FUER BREMSLEITUNG (p 4)
ORIFICE POUR CONDUITE DIRECTE
ORIFICIO PER LA CONDOTTA MODERABILE

THERMAL RANGE OF APPLICATION
THERMISCHER ANWENDUNGSBEREICH -40 ... +80°C
GAMME D'APPLICATION THERMIQUE
CAMPO DI APPLICAZIONE TERMICA

WORKING MEDIUM: AIR
ARBEITSMEDIUM: LUFT
FLUIDE D'UTILISATION: AIR
FLUIDO DI ESERCIZIO: ARIA

WORKING PRESSURE
BETRIEBSDRUCK MAX. 10 bar
PRESSION D'UTILISATION
PRESSIONE DI ESERCIZIO

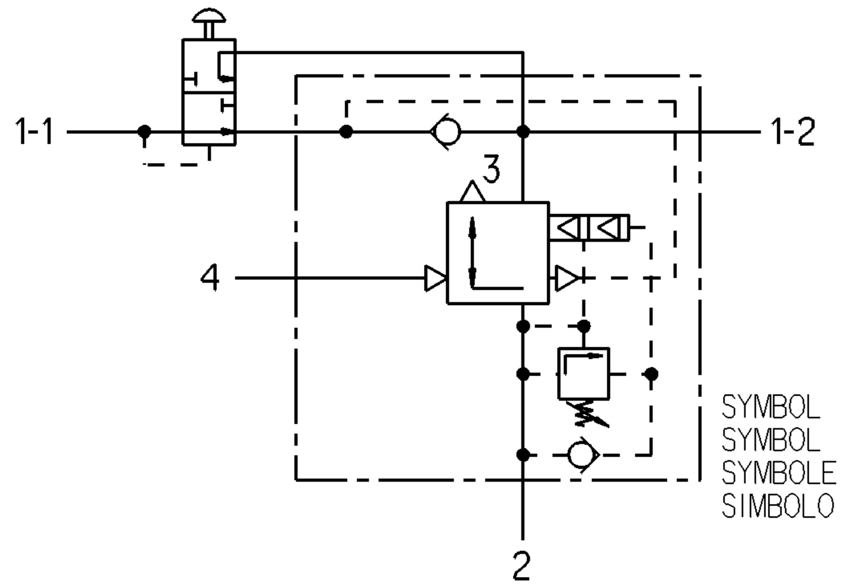

SYMBOL
SYMBOL
SYMBOLE
SIMBOLO

TORQUE FOR CONNECTIONS: ANZUGSMOMENT FUER EINSCHRAUBSTUTZEN: COUPLE DE SERRAGE DES RACCORDS: COPPIA DI SERRAGGIO DEI RACCORDI:	M22x1.5 -> M_a = 40±5 Nm M16x1.5 -> M_a = 30±5 Nm

General Specification: JED-334-0 , Size ISO 14405-1 E						
Further Technical Data:						
Doc. Code:			Sheet:	To		
General Tolerances JED-261						
		Range of Nominal Dimensions (± mm)				
Class 1)		≤ 50	> 50 ≤ 180	> 180 ≤ 400	> 400	∢
Fine		0.5	1.0	1.5	2.0	±3°
Medium	X	1.0	2.0	3.0	4.0	
Coarse		2.0	3.5	5.0	6.5	
Tapped Holes acc.						
1) Tolerance Class Applied Crossmarked						

Copyright WABCO®

Date	Signature
Drawn	
2013-10-16	Szyszka
Checked	
2013-10-16	Hladik
Expert	
	Szyszka

WABCO

RELAY EMERGENCY VALVE
ANHAENGER BREMSVENTIL
VALVE RELAIS D'URGENCE
SERVO DISTRIBUTORE

Mass	Scale	Material No.	Date of first issue: 1982-07-16		
			Doc.Code	Language	Sheet
1.65 KG	1:1	971 002 531 0	005	ML	1/1
Size	CAD System				
A 1	Pro/E				

ECN-No.	Revision	Techn. Resp.	Replacement for
161943	1 x G	5251	

100mm

drw: 9710025310____005 / Version: -.5 / state: Approved / mdl: 9710025310____A02

Toute Communication ou reproduction de ce document, toute exploitation ou communication de son contenu sont interdites, sauf autorisation expresse. Tout manquement a cette regle constitue un abus evident et expose son auteur au versement de dommages et interets. Tous droits de propriete industrielle reserves, notamment en matiere de brevets et de modeles.

Weitergabe sowie Vervielfaeltigung dieser Unterlage, Verwertung und Mitteilung ihres Inhalts nicht gestattet, soweit nicht ausdruecklich zugestanden. Zuwiderhandlungen stellen einen offensichtlichen Missbrauch dar und verpflichten zu Schadenersatz. Alle Rechte fuer den Fall der Patenterteilung oder Gebrauchsmuster-Eintragung vorbehalten.

Non e permesso consegnare a terzi o riprodurre questo documento, ne utilizzarne il contenuto o renderlo comunque noto a terzi senza autorizzazione esplicita. Ogni infrazione costituira un evidente abuso e comportera il risarcimento dei danni subiti. E'fatta riserva di tutti i diritti derivanti da brevetti o modelli.

Copying of this document and giving it to others and the use or communication of the contents thereof, are forbidden without express authority. Contravention of this restriction will constitute an evident abuse and result in a liability to the payment of damages. All rights are reserved in the event of the grant of patent or registration of a utility model or design. This document is the subject of copyright.