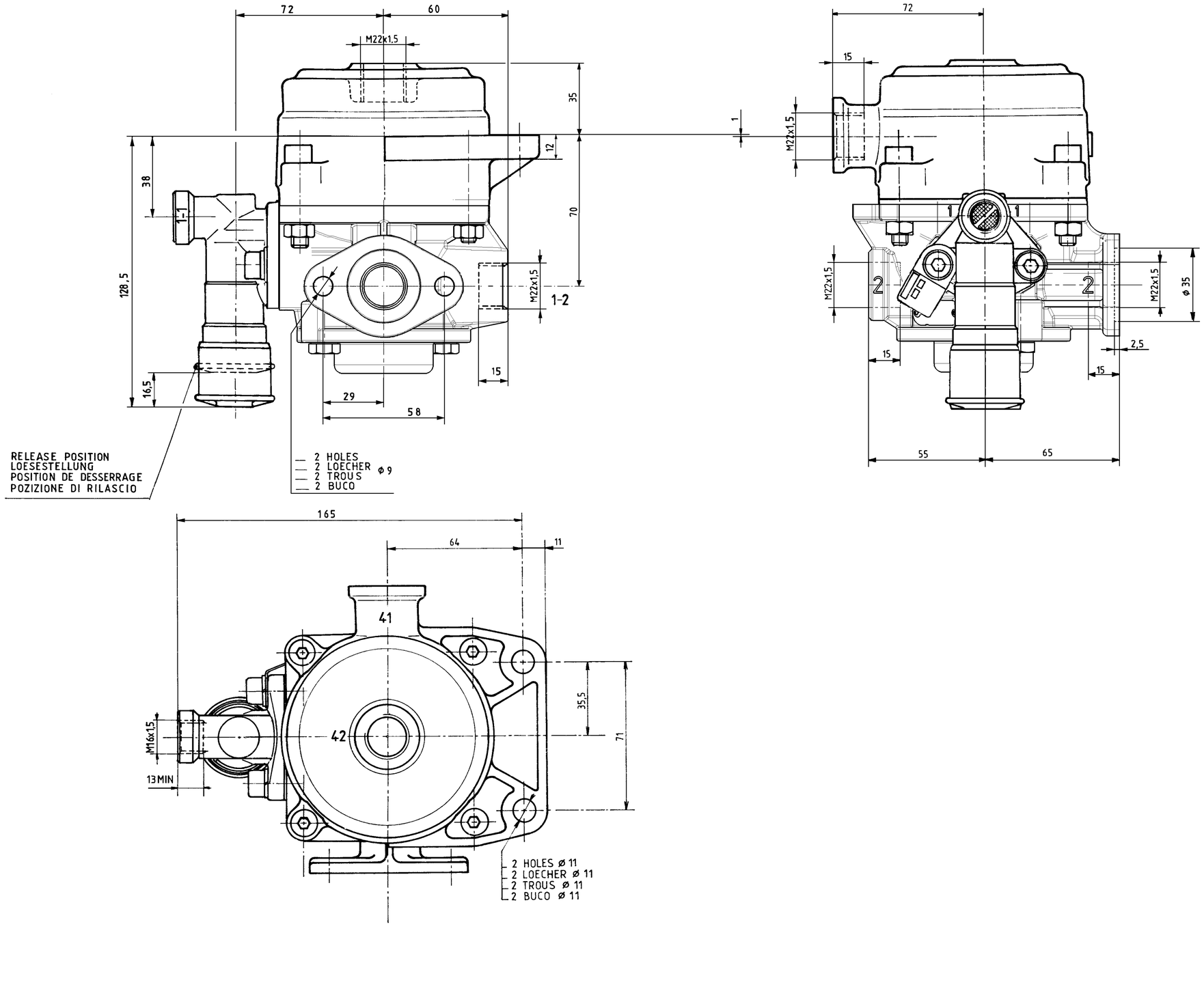


| | |
|---|---|
| MEDUM<br>MEDIUM<br>FLUDE<br>FLUIDO | AIR<br>LUFT<br>AIR<br>ARIA |
| THERMICAL RANGE<br>THERM ANWENDUNGSBEREICH<br>TEMPERATURE D'UTILISATION<br>TEMPERATURA DI UTLIZZAZIONE | -40°C ...+80°C |

PORTS-ANSCHLUESSE
ORIFICES-ORIFIZZI

| | |
|---|---|
| 11 | EMERGENCY LINE<br>VORRATSLEITUNG<br>CONDUITE AUTOMATIQUE<br>CONDOTTA AUTOMATICO |
| 12 | RESERVOIR<br>LUFTBEHAELTER<br>RESERVOIR<br>SERBATOIO |
| 2 | CYLINDER<br>ZYLINDER<br>CYLINDRE<br>CILINDRO |
| 3 | AIR EXHAUST<br>ENTLUEFTUNG<br>ECHAPPEMENT<br>SCARICO |
| 41 | SERVICE LINE<br>BREMSLEITUNG<br>CONDUITE DIRECTE<br>CONDOTTA MODERABILE |
| 42 | SECONDARY LINE<br>HILFLEITUNG<br>CONDUITE SECOURS<br>CONDOTTA SICCORSO |

General Specification: JED-334-0 . Size ISO 14405-1 E
Further Technical Data:
Doc. Code: Sheet: To
General Tolerances JED-261

| Class 1) | Range of Nominal Dimensions ( ± mm) ≤ 50 | > 50 ≤ 180 | > 180 ≤ 400 | > 400 | ∢ |
|---|---|---|---|---|---|
| Fine | 0.5 | 1.0 | 1.5 | 2.0 | |
| Medium X | 1.0 | 2.0 | 3.0 | 4.0 | ±3° |
| Coarse | 2.0 | 3.5 | 5.0 | 6.5 | |

Tapped Holes acc. JED-152
1) Tolerance Class Applied Crossmarked

Copyright WABCO®

| Date | Signature |
|---|---|
| Drawn 2013-10-03 | BALAGA |
| Checked 2013-10-03 | HLADIK |
| Expert SZYSZKA | |

**WABCO**

RELAY EMERGENCY VALVE
ANHAENGER-BREMSVENTIL
VALVE RELAIS D'URGENCE
SERVODISTRIBUTORE

| Mass | Scale | Material No. | Date of first issue: 1981-12-14 | | |
|---|---|---|---|---|---|
| 2.1 KG | 1:1 | 971 002 548 0 | Doc. Code 005 | Language ML | Sheet 1/1 |
| Size A 1 | CAD System CADAM | | EDN-No. 161943 | Revision 1 X D | Techn. Resp. 5250 |

Replacement for -

100mm

Tous droits de propriété intellectuelle réservés, notamment en matière de brevets et de modèles.
Weitergabe sowie Vervielfältigung dieser Unterlage, Verwertung und Mitteilung ihres Inhalts nicht gestattet, soweit nicht ausdrücklich zugestanden. Zuwiderhandlungen verpflichten zu Schadenersatz. Alle Rechte für den Fall der Patenterteilung oder Gebrauchsmustereintragung vorbehalten.
Copyright of this document not given; it is others not the use or communication of the contents hereof, are forbidden without express authority. Offenders are liable to the payment of damages. All rights are reserved in the event of the grant of a patent or registration of a utility model or design. The document is the subject of copyright.