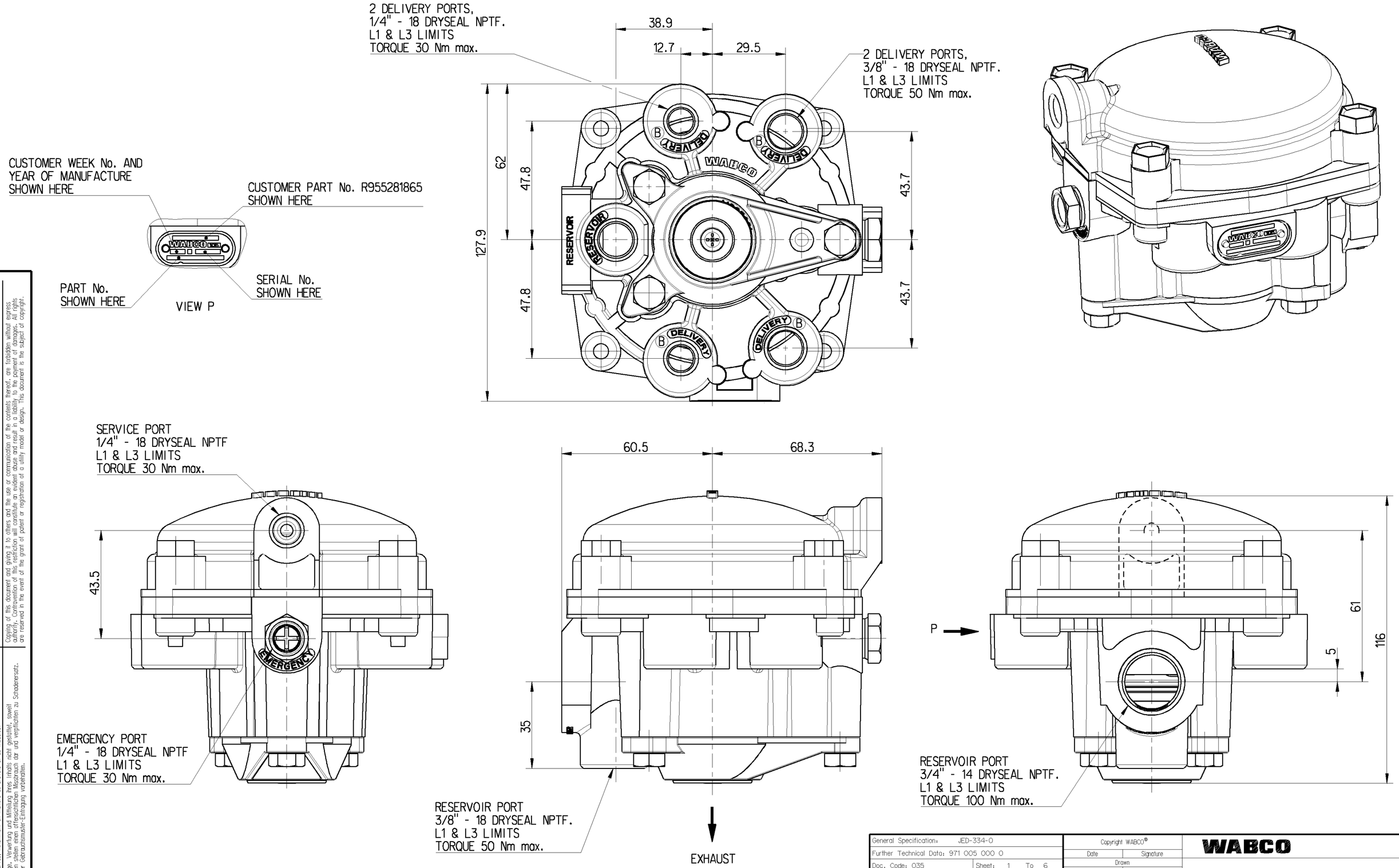

TECHNICAL DATA:

WORKING MEDIUM : AIR

THERMAL RANGE OF APPLICATION : -40°C TO +80°C

MAX WORKING PRESSURE : 9.4 bar.

OPEN PORTS ARE FITTED WITH CLOSURE PLUGS FOR STORAGE AND TRANSIT PURPOSES.

General Specification: JED-334-0					
Further Technical Data: 971 005 000 0					
Doc. Code: 035	Sheet: 1 To 6				
General Tolerances JED-261					
	Range of Nominal Dimensions (± mm)				
Class 1)	≤ 50	> 50 ≤ 180	> 180 ≤ 400	> 400	∢
Fine	0.5	1.0	1.5	2.0	±3°
Medium	1.0	2.0	3.0	4.0	
Coarse	2.0	3.5	5.0	6.5	
Tapped Holes acc. -					
1) Tolerance Class Applied Crossmarked					

Copyright WABCO®

Date	Signature
Drawn 2012-05-28	Bharathiraja
Checked 2012-05-29	Sathesh
Expert Kaufmann	

WABCO

RELAY EMERGENCY VALVE - RE

Mass	Scale	Material No.	Date of first issue: Doc.Code	Language	Sheet
1.7 KG	1:1	971 005 000 0	005	EN	1/1

Size	CAD System	ECN-No.	Revision	Techn. Resp.	Replacement for
A 2	Pro/E	158618	4 B	5250_WIN	M302615

100mm

Non e permesso consegnare a terzi o riprodurre questo documento, ne utilizzarne il contenuto o renderlo comunque noto a terzi senza autorizzazione esplicita. Ogni infrazione costituirà un evidente abuso e comporterà il risarcimento dei danni subiti. E'fatta riserva di tutti i diritti derivanti da brevetti o modelli.

Copying of this document and giving it to others and the use or communication of the contents thereof, are forbidden without express authority. Contravention of this restriction will constitute an evident abuse and result in a liability to the payment of damages. All rights are reserved in the event of the grant of patent or registration of a utility model or design. This document is the subject of copyright.

Toute Communication ou reproduction de ce document, toute exploitation ou communication de son contenu sont interdites, sauf autorisation expresse. Tout manquement à cette règle constitue un abus évident et expose son auteur au versement de dommages et intérêts. Tous droits de propriété industrielle réservés, notamment en matière de brevets et de modèles.

Weitergabe sowie Vervielfältigung dieser Unterlage, Verwertung und Mitteilung ihres Inhalts nicht gestattet, soweit nicht ausdrücklich zugestanden. Zuwiderhandlungen stellen einen offensichtlichen Missbrauch dar und verpflichten zu Schadenersatz. Alle Rechte fuer den Fall der Patenterteilung oder Gebrauchsmuster-Eintragung vorbehalten.