ASSEMBLY PROCEDURE

(a)

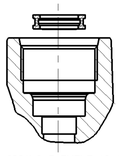

THE SPRING ELEMENT IS INSERTED INTO THE CHAMBER UNDER THE THREAD ROOT OF THE CONNECTION BORE (a) AND (b).

(b)

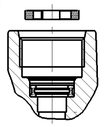

THE RETAINING CLIP IS INTRODUCED SO THAT IT RESTS FLAT ON THE THREAD ROOT (b) AND (c).
THE SPRING ELEMENT AND RETAINING CLIP ARE SYMMETRICAL.

(c)

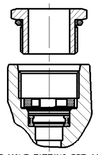

THE MALE FITTING PRE-ASSEMBLED WITH THE PRE-GREASED O-RING TO SEAL THE THREAD IS SCREWED BY HAND INTO THE TAPPED BORE (c) AND TIGHTENED.

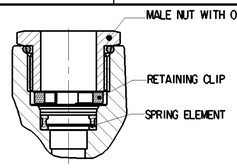

DESCRIPTION	M22x1.5 VOSS PART No.	M16x1.5 VOSS PART No.
MALE NUT WITH O-RING	00 62 03 99 00	00 62 02 99 00
RETAINER CLIP	00 62 01 90 00	00 62 00 90 00
SPRING ELEMENT	00 62 05 99 00	00 62 04 99 00

◇1◇ SAFETY CHARACTERISTICS	0
◇2◇ SIGNIFICANT CHARACTERISTICS	0
◇I◇ CUSTOMER INTERFACE	0

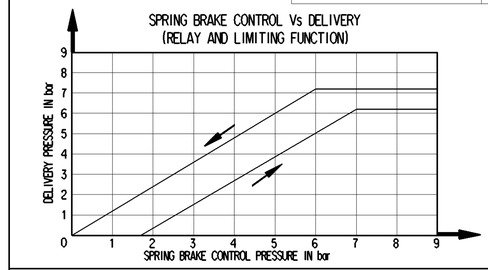

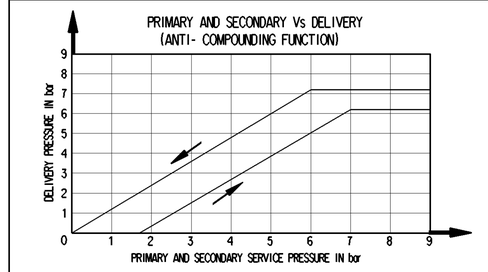

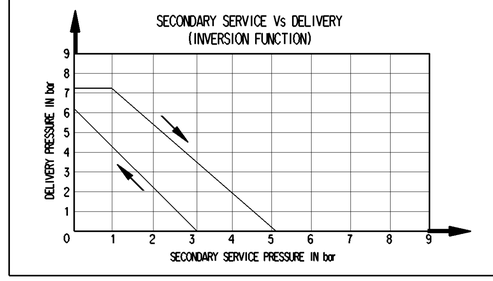

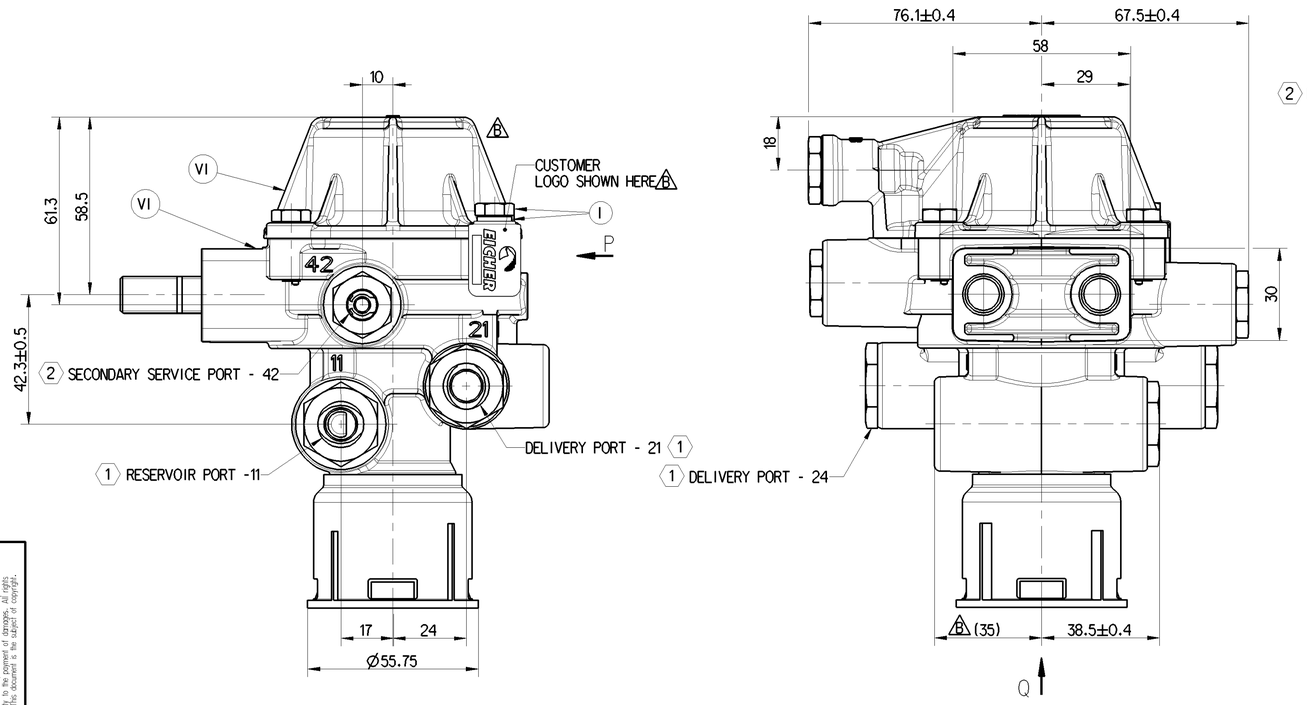

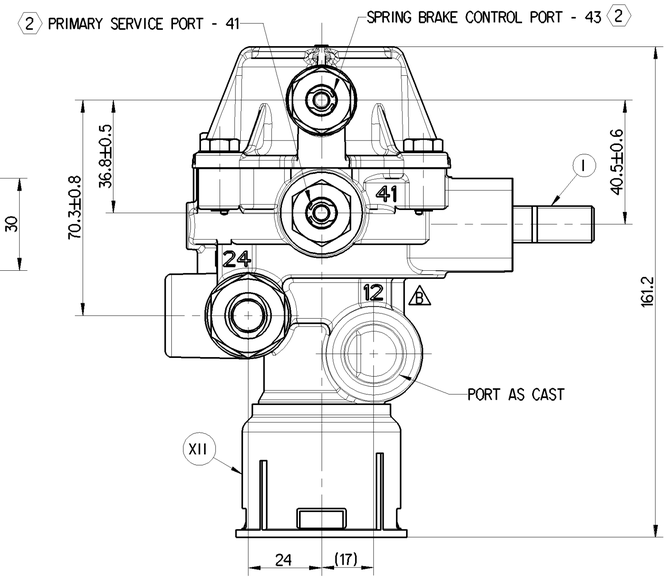

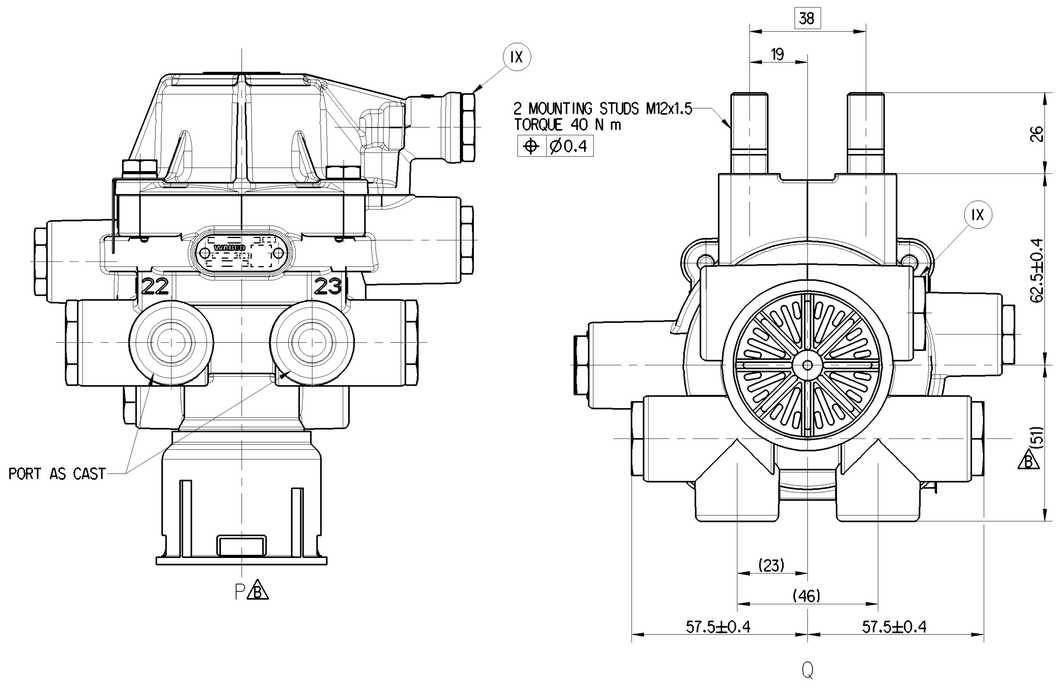

NAME PLATE DETAILS
2:1

3	CUSTOMER PART NUMBER
4	BATCH CODE
5	SERIAL NUMBER
6	WABCO PART NUMBER
7	PRI CODE
8	2D DATA MATRIX

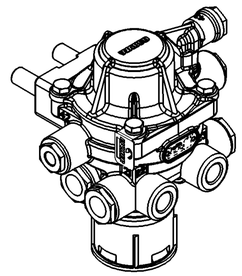

SL.No.	NOTES	
1	PRODUCT FUNCTION AND RELIABILITY	
1.1	WORKING MEDIUM	AIR
1.2	NORMAL WORKING PRESSURE	10 bar
1.3	MAXIMUM WORKING PRESSURE	13 bar
1.4	THERMAL RANGE OF APPLICATION	- 40°C TO +80°C
1.5	CORROSION RESISTANCE	240 HOURS OF NSS
1.6	NOISE LEVEL	≤ 72 dBA
2	VARIATION IN THE LIMITING PRESSURE DURING NORMAL VEHICLE RUNNING CONDITION WITH SIMULTANEOUS AIR APPLICATION IN PRIMARY AND SECONDARY INLET PORT IS	0.5 bar max
3	QUALITY COMPLIANCE TESTS WILL BE CARRIED OUT REGULARLY AS PER PS	
4	SERVICE LIFE TO FIRST OVERHAUL 2 YEARS/180000 km WHICHEVER IS EARLIER FOR AIR DRYER OR DDU FITTED VEHICLE 1 YEAR/80000 km WHICHEVER IS EARLIER FOR NON AIR DRYER OR DDU FITTED VEHICLE	
5	OPEN PORTS AND MALE THREADS ARE FITTED WITH CLOSURE PLUGS AND CLOSURE SLEEVE FOR STORAGE AND TRANSIT PURPOSES ONLY	

XVII	STEEL	NO TREATMENT
XVI	CAST IRON	PLATED
XV	STEEL	ZINC IRON PLATED
XIV	CAST IRON	NO TREATMENT
XIII	ZINC ALLOY	ANODISED
XII	PLASTIC	NO TREATMENT
XI	RUBBER	NO TREATMENT
X	STAINLESS STEEL	NO TREATMENT
IX	BRASS	NO TREATMENT
VIII	ZINC ALLOY	CHROMATED
VII	ALUMINIUM ALLOY	ANODISED
VI	ALUMINIUM ALLOY	CHROMATED
V	CAST IRON	PAINTED
IV	STEEL	POWDER COATED
III	STEEL	PAINTED
II	STEEL	PHOSPHATED
I	STEEL	ZINC PLATED
PART CODE	MATERIAL	SURFACE PROTECTION

	1	2
THREAD TYPE	M22x1.5, HEX. 24 TO SUIT VOSS PLUG IN SYSTEMS 230	M16x1.5, HEX. 19 TO SUIT VOSS PLUG IN SYSTEMS 230
PERMISSIBLE TORQUE	10±1 N m	10±1 N m

General Specification: ISO 8015, JED-334-1, Size ISO 14405 LP
Further Technical Data: PS 9718990000
Doc. Code: 032 Sheet: 1 To

General Tolerances JED-261

Class 1)	Range of nominal dimensions in mm ≤ 50	> 50 ≤ 180	> 180 ≤ 400	> 400	∢
Fine	±0.5	±1	±1.5	±2	±3°
Medium	X ±1	±2	±3	±4	
Coarse	±2	±3.5	±5	±6.5	

Tapped Holes acc. JED-388
1) Tolerance Class Applied Crossmarked

Copyright WABCO®

Date	Signature
Drawn 2022-05-27	Shenbaga S
Checked 2022-05-30	Thooyavan

Dimensions in mm

Mass	Scale	Material No.	Date of first issue: 2015-11-04
1.3 kg	1:1	971 899 000 0	Doc.Code 005 · Language EN · Sheet 1/1
Size A 1	CAD System CREO	ECN-No. 506996 · Revision 10 B · Techn. Resp. 5224_WIN	Replacement for -

WABCO

INVERSION / RELAY VALVE

100mm

Tous droits de propriété intellectuelle réservés, notamment en matière de brevets et de modèles.
Weitergabe sowie Vervielfältigung dieser Unterlage, Verwertung und Mitteilung ihres Inhalts nicht gestattet, soweit nicht ausdrücklich durch Schadensersatzpflicht untersagt. Gewerbliche Schutzrechte vorbehalten.
Alle Rechte vorbehalten.
Questo documento è proprietà esclusiva di questa società. Non è ammessa la sua riproduzione o diffusione senza autorizzazione scritta.
Tutti i diritti riservati in caso di rilascio di brevetto o modello.
Este documento es propiedad de esta compañía. Prohibida su reproducción o difusión sin autorización escrita.
Todos los derechos reservados en caso de registro de patente o modelo.
Este documento é propriedade da empresa. É proibida a sua reprodução ou difusão sem autorização escrita.
Todos os direitos reservados em caso de registo de patente ou modelo.
Deze documentatie is eigendom van deze onderneming. Ongeoorloofd is het gebruik ervan zonder schriftelijke toestemming.
Alle rechten voorbehouden in geval van octrooi- of modelregistratie.
Ten e pertanto consegnare a terzi o riprodurre questo documento, né utilizzare il contenuto o renderlo comunque noto a terzi senza nostra autorizzazione scritta. Ci riserviamo ogni diritto in caso di brevetto o registrazione di un modello.
Este documento es propiedad de esta empresa. Está prohibido su uso o reproducción sin autorización escrita.
Todos los derechos quedan reservados en caso de patente o modelo registrado.
Este documento é propriedade da empresa. É proibida a sua reprodução ou difusão sem autorização escrita.
Todos os direitos reservados em caso de registo de patente ou modelo.
Dit document is eigendom van deze onderneming. Ongeoorloofd is het gebruik ervan zonder schriftelijke toestemming.
Alle rechten voorbehouden in geval van octrooi- of modelregistratie.
Toute Communication ou reproduction de ce document, toute exploitation ou communication de son contenu sont interdites, sauf autorisation écrite préalable. Droits réservés en cas de brevet ou dépôt de modèle.
Copyright WABCO. Copyright. Copyright. Copyright. Copyright. Copyright. Copyright. Copyright. Copyright. Copyright.