SAFETY CHARACTERISTICS	0
SIGNIFICANT CHARACTERISTICS	0
CUSTOMER INTERFACE	0

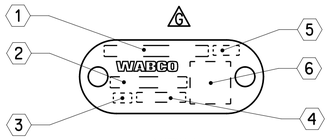

VIEW L
2:1

G	1	MANUFACTURING LOCATION
	2	ZF PART NUMBER
	3	SERIAL NUMBER
	4	BATCH CODE
	5	PRI CODE
	6	2D DATA MATRIX

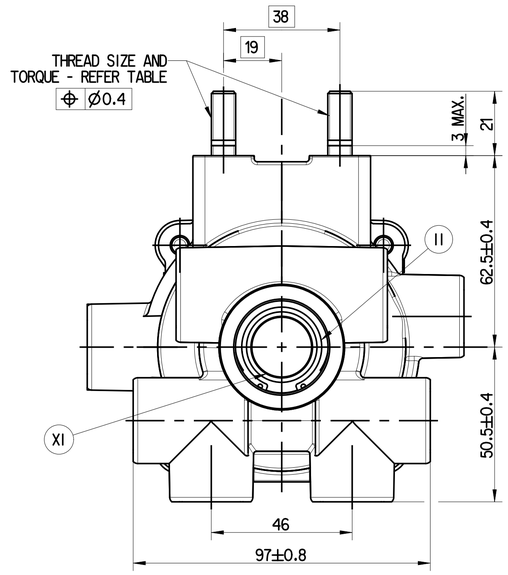

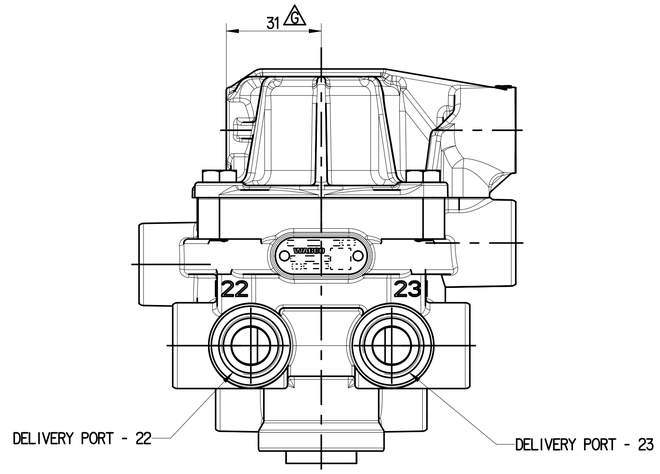

VIEW "L"

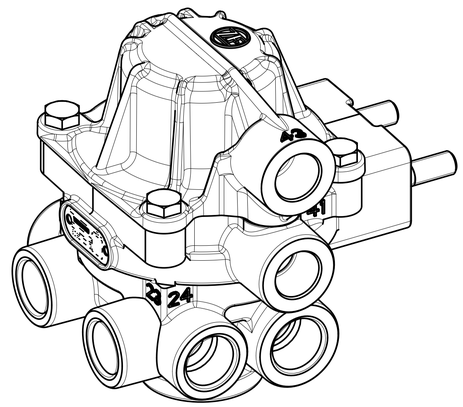

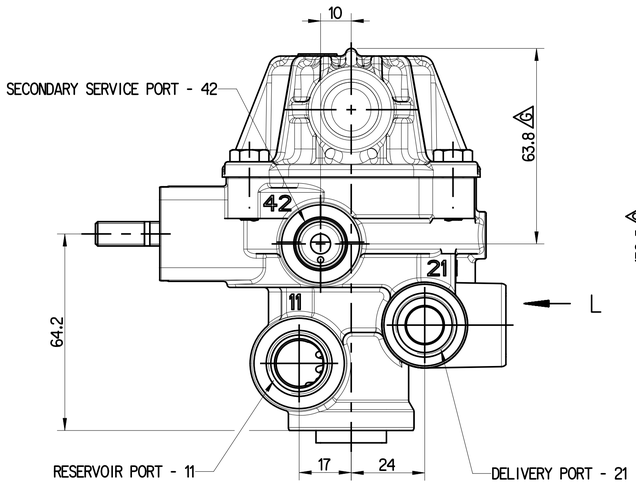

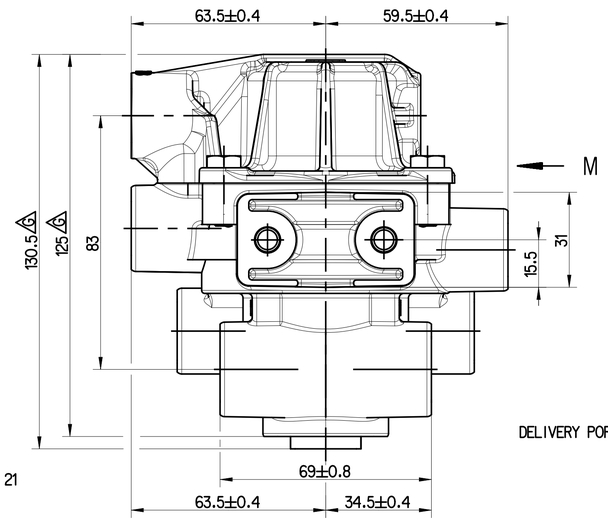

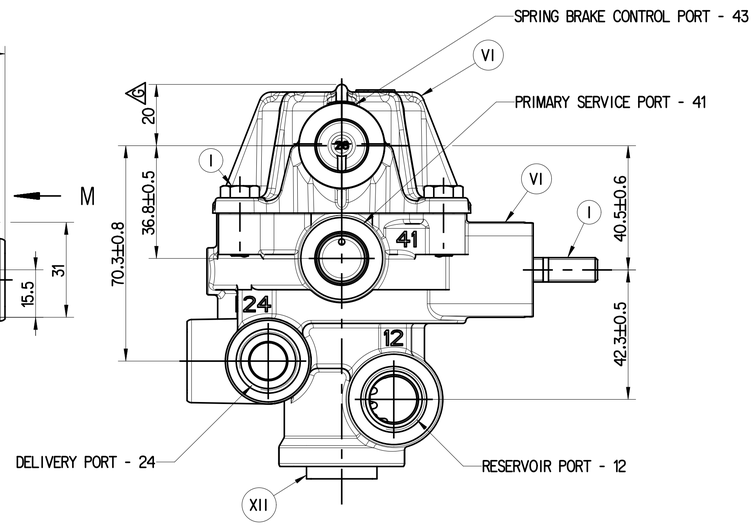

G	SL.No.	NOTES	
	1	PRODUCT FUNCTION AND RELIABILITY	
	1.1	WORKING MEDIUM	AIR
	1.2	MAXIMUM WORKING PRESSURE	10.4 bar
	1.3	THERMAL RANGE OF APPLICATION	- 40°C TO +88°C
	2	MOUNTING STUDS ARE FITTED WITH CLOSURE SLEEVES FOR STORAGE AND TRANSIT PURPOSE	

NOTES:
1. PORT IDENTIFICATION CHARACTER TO BE 4 mm HIGH MINIMUM
2. PART TO BE IDENTIFIED WITH WABCO NAME, PART NUMBER, MANUFACTURE DATE AND COUNTRY OF ORIGIN
3. PART TO BE BAGGED TO PROTECT FROM CONTAMINATION

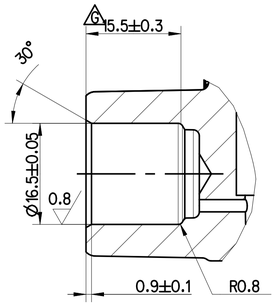

2:1
DETAIL "0"

XVII	STEEL	NO TREATMENT
XVI	CAST IRON	PLATED
XV	STEEL	ZINC IRON PLATED
XIV	CAST IRON	NO TREATMENT
XIII	ZINC ALLOY	ANODISED
XII	PLASTIC	NO TREATMENT
XI	RUBBER	NO TREATMENT
X	STAINLESS STEEL	NO TREATMENT
IX	BRASS	NO TREATMENT
VIII	ZINC ALLOY	CHROMATED
VII	ALUMINIUM ALLOY	ANODISED
VI	ALUMINIUM ALLOY	CHROMATED
V	CAST IRON	PAINTED
IV	STEEL	POWDER COATED
III	STEEL	PAINTED
II	STEEL	PHOSPHATED
I	STEEL	ZINC PLATED
PART CODE	MATERIAL	SURFACE PROTECTION

PART NUMBER	RESERVOIR PORT - 11	RESERVOIR PORT - 12	PRIMARY SERVICE PORT - 41	SECONDARY SERVICE PORT - 42	SPRING BRAKE CONTROL PORT - 43	DELIVERY PORTS 21, 22, 23 and 24	THREAD SIZE AND TORQUE	ZF PART NUMBER
M304120	1/2" - 14 NPTF L1 & L3 LIMITS TORQUE 70 Nm max.		3/8" - 18 NPTF L1 & L3 LIMITS TORQUE 50 Nm max.			3/8" - 18 NPTF L1 & L3 LIMITS TORQUE 50 Nm max.	M8x1.25 TORQUE 22.5±2.5 Nm	971 899 100 0
M304570			TO SUIT PUSH TO CONNECT FITTING FOR 3/8" TUBE O/D REFER DETAIL "0"					971 899 120 0

G

General Specification: ISO 8015, JED-334-1, Size ISO 14405 LP					
Further Technical Data: PS 9718991000					
Doc. Code: 035			Sheet: 01 To 08		
General Tolerances JED-261					
	Range of nominal dimensions in mm				
Class 1)	≤ 50	> 50 ≤ 180	> 180 ≤ 400	> 400	∢
Fine	±0.5	±1	±1.5	±2	
Medium X	±1	±2	±3	±4	±3°
Coarse	±2	±3.5	±5	±6.5	
Tapped Holes acc. -					
1) Tolerance Class Applied Crossmarked					

Copyright ZF®

Date	Signature
Drawn 2024-06-19	Prasanth
Checked 2024-06-19	Thooyavan

Dimensions in mm

INVERSION / RELAY VALVE

Mass	Scale	Material No.	Date of first issue: 2004-01-27
1.1 kg	1:1 / 2:1	971 899 120 0	Doc.Code 005, Language EN, Sheet 1/1
Size A 1	CAD System CREO	ECN-No. 515729, Revision 11 G, Techn. Resp. 5224_WIN	Replacement for -

100mm

Tutti i diritti riservati, in particolare quelli relativi alla traduzione, al prestito, alla stampa, alla memorizzazione su supporti di dati, alla riproduzione per via fotografica o analoga e alla valutazione scientifica sono riservati.

Tous droits de propriété intellectuelle réservés, notamment en matière de brevets et de modèles.

Weitergabe sowie Vervielfältigung dieser Unterlage, Verwertung und Mitteilung ihres Inhalts nicht gestattet, soweit nicht ausdrücklich zugelassen. Zuwiderhandlungen verpflichten zu Schadensersatz. Alle Rechte für den Fall der Patent- oder Gebrauchsmustereintragung vorbehalten.

Non è permesso consegnare a terzi, riprodurre questo documento, né utilizzarne il contenuto o renderlo comunque noto a terzi se non espressamente autorizzato. Gli trasgressori sono tenuti al risarcimento dei danni. Si riserva il diritto di depositare brevetti o registrare modelli di utilità.

Copying of this document and giving it to others and the use or communication of the contents thereof, are forbidden without express authority. Offenders are liable to the payment of damages. All rights are reserved in the event of the grant of patent or registration of a utility model or design. This document is the subject of copyright.