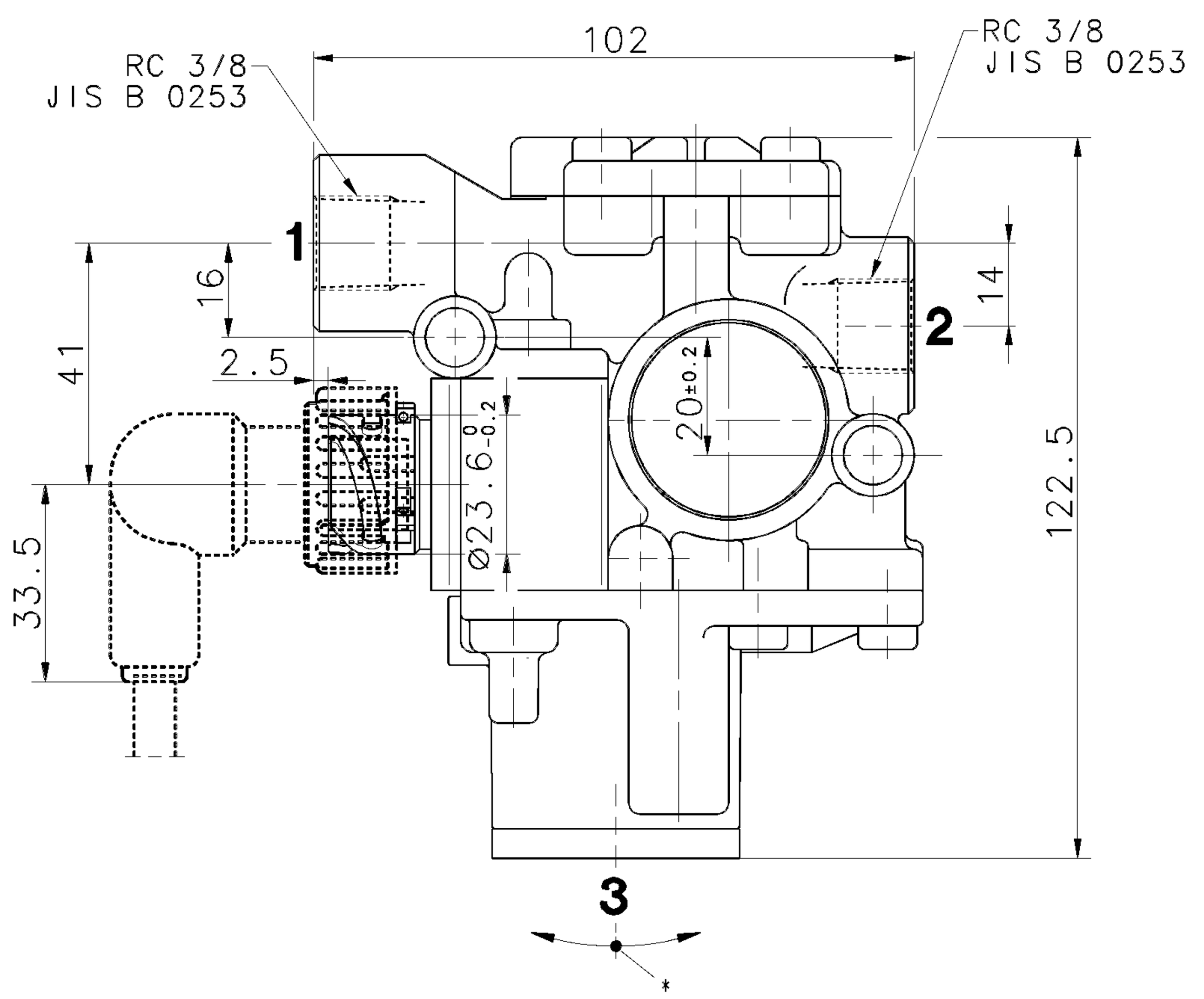

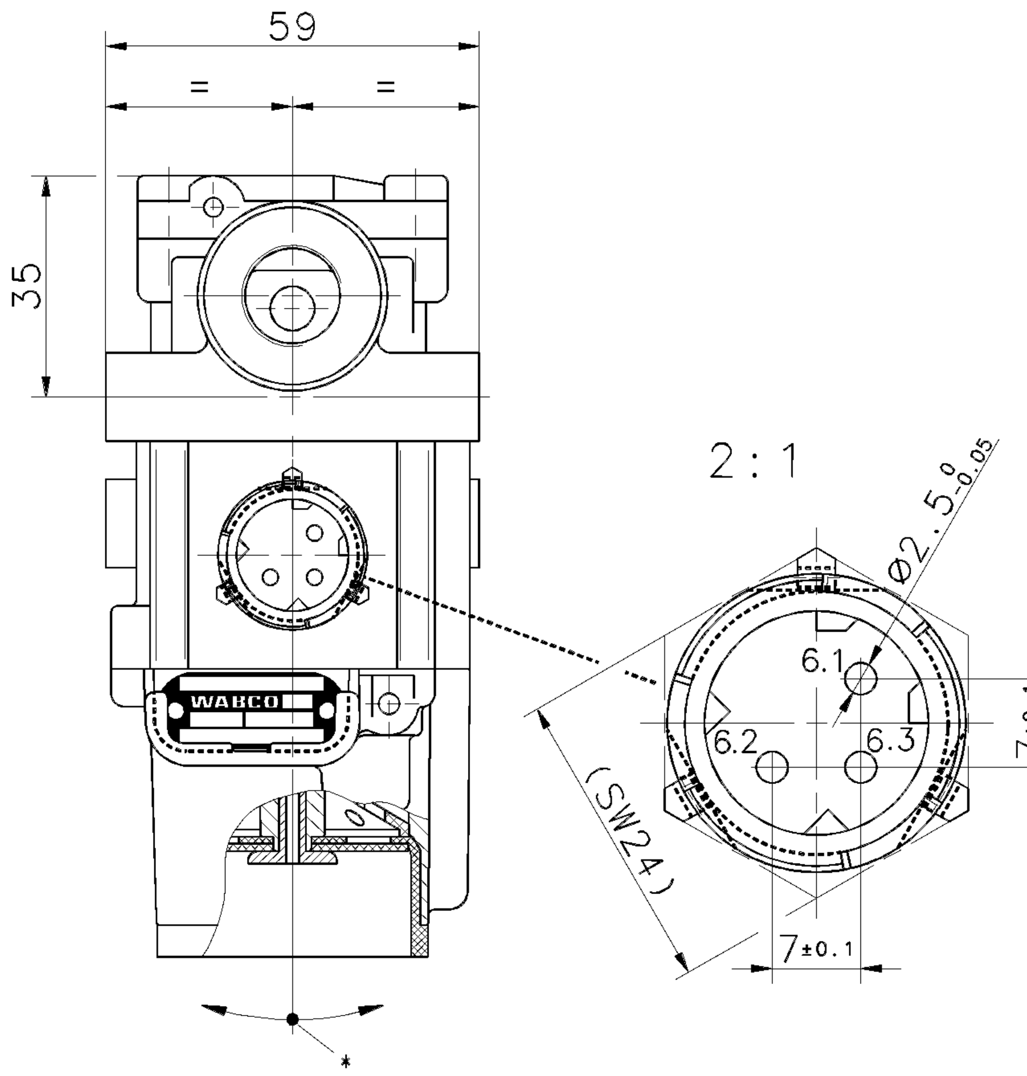

THE VALVE CORRESPONDS TO THE REGULATIONS FOR ELECTROMAGNETIC DEVICES ACCORDING TO VDE 0580
DAS GERAET ENTSPRICHT DEN BESTIMMUNGEN FUER ELEKTROMAGNETISCHE GERAETE NACH VDE 0580
LA VALVE CORRESPOND AUX CONDITIONS POUR DES APPAREILS ELECTROMAGNETIQUES SUIVANT VDE 0580
LA VALVOLA CORRISPONDE ALLE CONDIZIONI PER APPARECCHI ELECTROMAGNETICHI SECONDO VDE 0580

MEDIUM MEDIUM FLUIDE FLUIDO	AIR LUFT AIR ARIA
NOMINAL VOLTAGE NENNSPANNUNG VOLTAGE NOMINAL VOLTAGGIO NOMINALE	U_N = 24 V $DC^{+20\%}_{-10\%}$
SERVICE CONDITION BETRIEBSART CONDITION DU SERVICE CONDIZIONE DI SERVISO	DISCONTINUOUS SERVICE AUSSETZBETRIEB ED 5% / 5min SERVICE DISCONTINUE ESERCIZIO DISCONTINU
NOMINAL CURRENT NENNSTROM COURANT NOMINAL CURRENTE NOMINALE	I_N ≤ 1.65 A
TYPE OF PROTECTION SCHUTZART MODE DE PROTECTION TIPO DI PROTEZIONE	IP 68/69 K
PROTECTION CLASS SCHUTZKLASSE CLASSE DE PROTECTION CLASSE DI PROTEZIONE	III VDE 0580
WORKING PRESSURE BETRIEBSDRUCK PRESSION D'UTILISATION PRESSION DI ESERCIZIO	pe = MAX.11 bar
THERMAL RANGE OF APPLICATION THERMISCHER ANWENDUNGSBEREICH GAMME D'APPLICATION THERMIQUE CAMPO DI APPLICAZIONE THERMICA	-40°C....+80°C
* ADMISSIBLE INSTALLATION POSITION ZULAESSIGE EINBAULAGE POSITION D'INSTALLATION ADMISE POSIZIONEEDI MONTAGGIO AMMESSA	±30°

SOCKET GERAETESTECKDOSE PRISE DE COURANT PRESA DI CORRENTE	449 413 000 0 449 513 000 0
ELECTRICAL CONTROL ELEKTRISCHER STEUERANSCHLUSS COMMANDE ELECTRIQUE COMMANDO ELECTRICO	DIN 72585-A1-3.1-Sn/K1

WITHOUT DIAPHRAGM SPRING I / RESIDUAL PRESSURE OHNE MEMBRANFEDER I / RUECKHALTEDRUCK SANS RESSORT DE DIAPHAGME I / PRESSION DE RETENUE SENZA MOLLA DI DIAFRAMME I / PRESSIONE DI RITENERE	≈ 0 bar

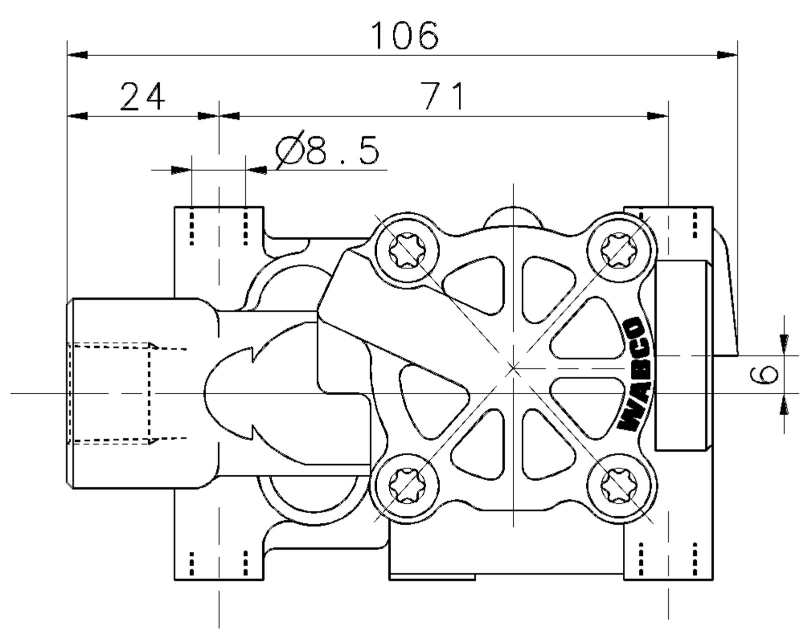

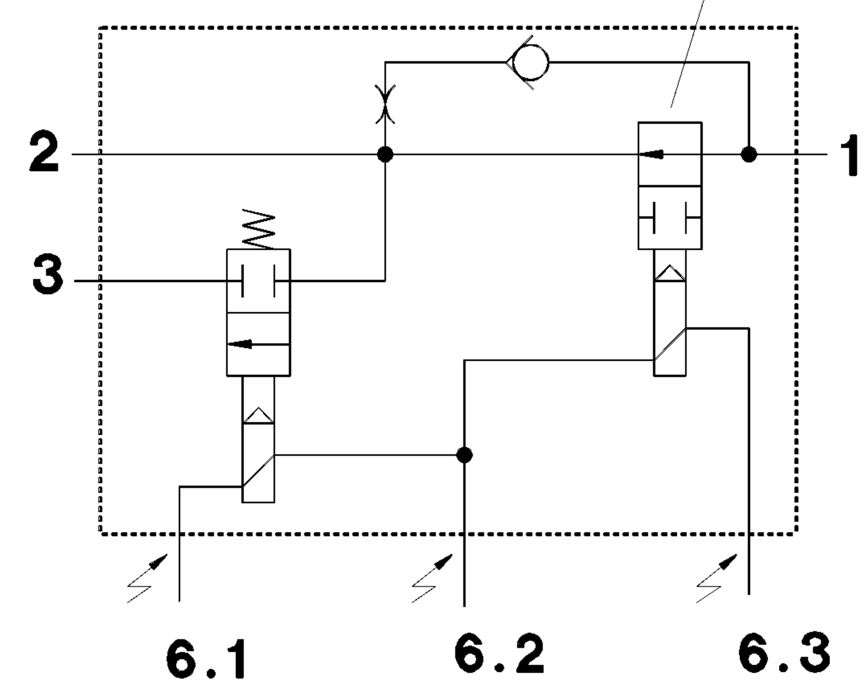

1 SUPPLY OF ENERGY
ENERGIEZUFLUSS
ALIMENTATION
ALIMENTATIONE

2 DELIVERY OF ENERGY
ENERGIEABFLUSS
UTILISATION
MANDATA

3 EXHAUST
ENTLUEFTUNG
ECHAPPEMENT
SCARICO

ELECTRICAL CONTROL (SOLENOID)
ELEKTRISCHER STEUERANSCHLUSS (MAGNET)
COMMANDE ELECTRIQUE (AIMANT)
COMMANDO ELECTRICO (MAGNETE)

6.1 EXHAUST SOLENOID
AUSLASSMAGNET
AIMANT D'ECHAPPEMENT
MAGNETE DI SCARICO

6.2 GROUND
MASSE
MASSE
MASSA

6.3 INLET SOLENOID
EINLASSMAGNET
AIMANT D'ADMISSION
MAGNETE D'IMMISSIONE

FOR FURTHER TECHNICAL DATA SEE PRODUCT SPECIFICATION
WEITERE TECHNISCHE DATEN SIEHE PRODUKT SPEZIFIKATION
POUR AUTRES DONNEES TECHNIQUES VOIR PRODUCT SPECIFICATION
PER ULTERIORI DATI TECNICI VEDERE SPECIFICA DI PRODOTTO
972 195 045 0 (CODE 435)

ONLY FOR AOH-TRUCKS

GENERAL SPECIFICATION: JED-334						
FURTHER TECHNICAL DATA:						
DOC. CODE:	SHEET: TO					
GENERAL TOLERANCES						
CLASS 1)		RANGE OF NOMINAL DIMENSIONS (± mm) ≤50	> 50 ≤180	>180 ≤400	>400	∢
FINE		0,5	1,0	1,5	2,0	± 3°
MEDIUM		1,0	2,0	3,0	4,0	
COARSE	×	2,0	3,5	5,0	6,5	
TAPPED HOLES ACC. ISO 4039 / JED-152						
1) TOLERANCE CLASS APPLIED CROSSMARKED						

DCN-NO.	REV.	DATE
073553	B	00-12-20

CADAM-DRAWING COPYRIGHT		WABCO
DATE	SIGNATURE	
DRAWN: 00-12-20	HARNISCHM	SOLENOID MODULATOR VALVE MAGNETREGELVENTIL ELECTROVALVE MODERABLE VALVOLA DI REGULAZIONE MAGNETICA
CHECKED: 00-12-20	HOEFLER	
STANDARDIZATION:		

MASS	SCALE	PRODUCT IDENTIFICATION NO.	DOC. CODE	SHEET
0.72 KG	1:1 (2:1)	972 195 045 0	605	1/1
SIZE	I.R.I.	SHAPE CODE	REPLACEMENT FOR	
A 1	142		972 195 045 0/99-03-16	

100mm

EXPERT CODE 7 6 0 PRODUCT TYPE 0 1 ☒

TOUTE COMMUNICATION OU REPRODUCTION DE CE DOCUMENT, TOUTE EXPLOITATION OU COMMUNICATION DE SON CONTENU SONT INTERDITES, SAUF AUTORISATION EXPRESSE. TOUT MANQUEMENT A CETTE REGLE CONSTITUE UN ABUS EVIDENT ET EXPOSE SON AUTEUR AU VERSEMENT DE DOMMAGES ET INTERETS. TOUS DROITS DE PROPRIETE INDUSTRIELLE RESERVES, NOTAMMENT EN MATIERE DE BREVETS ET DE MODELES.
WEITERGABE SOWIE VERVIELFAELTIGUNG DIESER UNTERLAGE, VERWERTUNG UND MITTEILUNG IHRES INHALTS NICHT GESTATTET, SOWEIT NICHT AUSDRUECKLICH ZUGESTANDEN. ZUWIDERHANDLUNGEN STELLEN EINEN OFFENSICHTLICHEN MISSBRAUCH DAR UND VERPFLICHTEN ZU SCHADENERSATZ. ALLE RECHTE FUER DEN FALL DER PATENTERTEILUNG ODER GEBRAUCHSMUSTER-EINTRAGUNG VORBEHALTEN.
NON E PERMESSO CONSEGNARE A TERZI O RIPRODURRE QUESTO DOCUMENTO, NE UTILIZZARNE IL CONTENUTO O RENDERLO COMUNQUE NOTO A TERZI SENZA AUTORIZZAZIONE ESPLICITA. OGNI INFRAZIONE COSTITUIRA UN EVIDENTE ABUSO E COMPORTERA IL RISARCIMENTO DEI DANNI SUBITI. E'FATTA RISERVA DI TUTTI I DIRITTI DERIVANTI DA BREVETTI O MODELLI.
COPYING OF THIS DOCUMENT, AND GIVING IT TO OTHERS AND THE USE OR COMMUNICATION OF THE CONTENTS THEREOF, ARE FORBIDDEN WITHOUT EXPRESS AUTHORITY. CONTRAVENTION OF THIS RESTRICTION WILL CONSTITUTE AN EVIDENT ABUSE AND RESULT IN A LIABILITY TO THE PAYMENT OF DAMAGES. ALL RIGHTS ARE RESERVED IN THE EVENT OF THE GRANT OF PATENT OR REGISTRATION OF A UTILITY MODEL OR DESIGN. THIS DOCUMENT IS THE SUBJECT OF COPYRIGHT.

1609/016/3/04.93
605/653