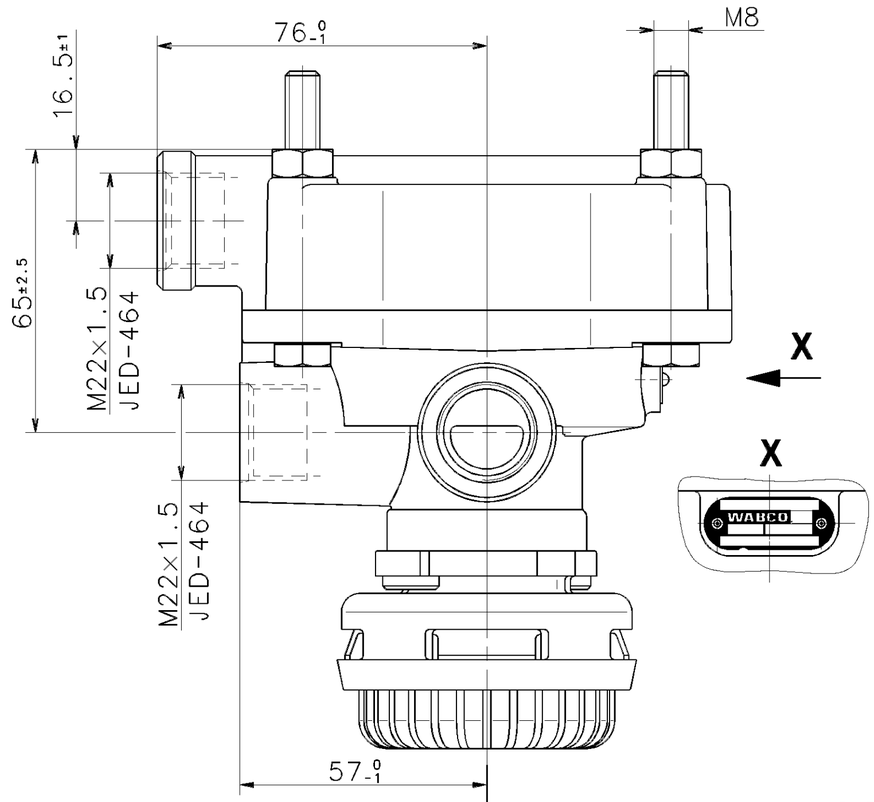

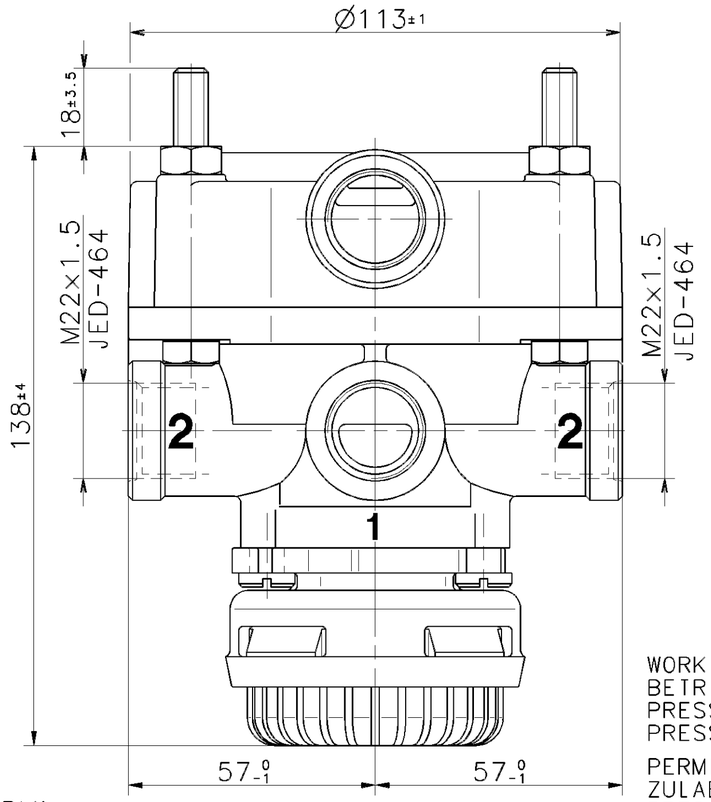

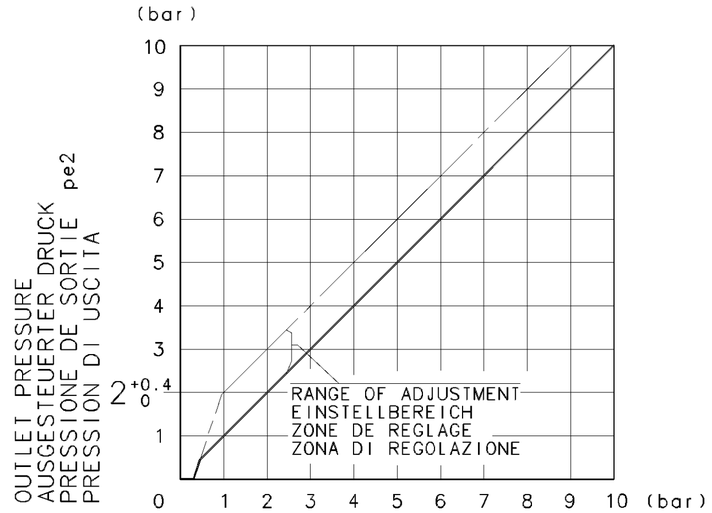

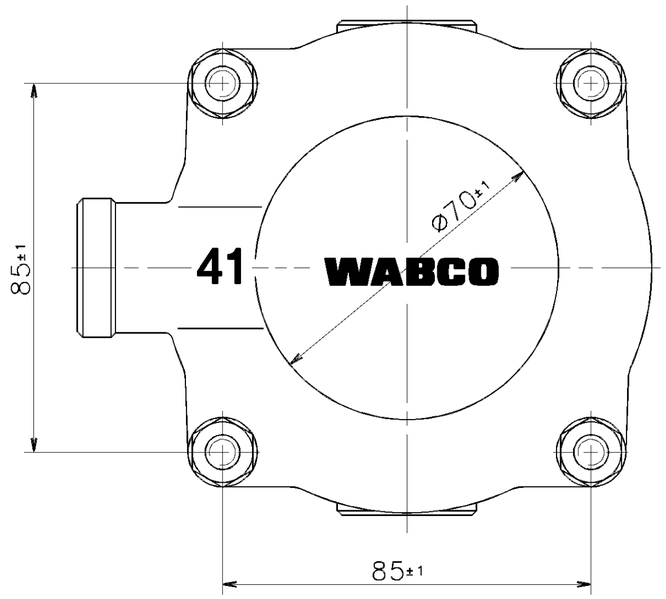

1 SUPPLY
VORRAT
ALIMENTATION (pe 1)
ALIMENTAZIONE

2 OUTLET PRESSURE
AUSGESTEUERTER DRUCK
PRESSION DE SORTIE (pe 2)
PRESSIONE EROGATA

3 EXHAUST
ENTLUEFTUNG
ECHAPPEMENT
SCARICO

41 CONTROL PRESSURE
STEUERDRUCK
PRESSION DE COMMANDE (pe 41)
PRESSIONE DI COMANDO

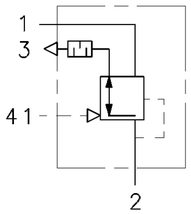

WORKING PRESSURE
BETRIEBSDRUCK
PRESSION DE SERVICE
PRESSIONE DI SERVIZIO: *pe1=10 bar; **pe1=12,5 bar
pe41=10 bar

PERMISSIBLE PRESSURE
ZULAESSIGER DRUCK
PRESSION ADMISSIBLE
PRESSIONE AMMISSIBILE: pe 1=MAX. 14 bar
pe41=MAX. 12 bar
TEMPORARILY
KURZZEITIG
DE COURTE DUREE
BREVE TEMPO SOLO

THERMAL RANGE OF APPLICATION:
* THERMISCHER ANWENDUNGSBEREICH:
APPLICATION THERMIQUE:
CAMPO DI APPLICAZIONE THERMICA: -40°C...+80°C

THERMAL RANGE OF APPLICATION:
** THERMISCHER ANWENDUNGSBEREICH:
APPLICATION THERMIQUE:
CAMPO DI APPLICAZIONE THERMICA: -30°C...+80°C

MEDIUM: AIR
MEDIUM: LUFT
FLUIDE: AIR
FLUIDO: ARIA

INSTALLATION POSITION: EXHAUST SHOWN AT BASE (AXIS CENTRE OF THE DEVICE DEVIATES MAX 90° FROM VERTICAL)

EINBAULAGE: ENTLUEFTUNG NACH UNTEN (MITTELACHSE DES GERAETES MAX 90 ° VON DER SENKRECHTEN ABWEICHEND)

POSITION D'INSTALLATION: ECHAPPEMENT VERS LE BAS (ECART DE L'AXE MEDIAN DE L'APPAREIL PAR RAPPORT A LA VERTICA E: 90° MAX.)

POSIZIONE DI MONTAGGIO: SCARICO VERSO IL BASSO (DEVIAZIONE ASSE APPARECCHIO RISPETTO ALLA VERTICALE:MAX.90°)

GENERAL SPECIFICATION: JED-334						
FURTHER TECHNICAL DATA:						
DOC. CODE:		SHEET: T0				
GENERAL TOLERANCES						
CLASS 1)	RANGE OF NOMINAL DIMENSIONS (± mm)					
		≤50	> 50 ≤180	>180 ≤400	>400	
FINE		0,5	1,0	1,5	2,0	± 3°
MEDIUM	X	1,0	2,0	3,0	4,0	
COARSE		2,0	3,5	5,0	6,5	
TAPPED HOLES ACC. ISO 4039 / JED-152						
1) TOLERANCE CLASS APPLIED CROSSMARKED						

DCN-NO.	REV.	DATE

100mm

CADAM-DRAWING COPYRIGHT

DATE	SIGNATURE
DRAWN: 00-11-01	MEINKING
CHECKED: 00-11-01	FABIAN
STANDARDIZATION:	

WABCO

RELAY VALVE
RELAISVENTIL
VALVE RELAIS
VALVOLA RELE

MASS	SCALE	PRODUCT IDENTIFICATION NO.	DOC. CODE	SHEET
≈1.4 KG	1:1	973 003 008 0	605	1/1
SIZE	I.R.I.		SHAPE CODE	REPLACEMENT FOR
A 2	140			

EXPERT CODE 2 2 2

PRODUCT TYPE 0 0 X

1009/012/3/04.93

605/653

TOUTE COMMUNICATION OU REPRODUCTION DE CE DOCUMENT, TOUTE EXPLOITATION OU COMMUNICATION DE SON CONTENU SONT INTERDITES SAUF AUTORISATION ECRITE. TOUS DROITS DE PROPRIETE INDUSTRIELLE RESERVES. NOTAMMENT EN MATIERE DE BREVETS ET DE MODELES.
WEITERGABE SOWIE VERVIELFAELTIGUNG DIESER UNTERLAGE, VERWERTUNG UND MITTEILUNG IHRES INHALTS NICHT GESTATTET SOWEIT NICHT AUSDRUECKLICH GESTATTET. ANDERNFALLS ERFOLGT SCHADENSERSATZPFLICHT. ALLE RECHTE FUER DEN FALL DER PATENTERTEILUNG ODER GEBRAUCHSMUSTER-EINTRAGUNG VORBEHALTEN.
NON È PERMESSO CONSEGNARE A TERZI O RIPRODURRE QUESTO DOCUMENTO, NE UTILIZZARNE IL CONTENUTO O RENDERNE ESPOSTO AL PUBBLICO SENZA AUTORIZZAZIONE SCRITTA. TUTTI I DIRITTI DERIVANTI DA MARCHI E BREVETTI O MODELLI.
COPYING OF THIS DOCUMENT AND GIVING IT TO OTHERS AND THE USE OR COMMUNICATION OF THE CONTENTS THEREOF, ARE FORBIDDEN WITHOUT EXPRESS AUTHORITY. OFFENDERS ARE LIABLE TO PAY DAMAGES. ALL RIGHTS ARE RESERVED IN THE EVENT OF THE GRANT OF PATENT OR REGISTRATION OF A UTILITY MODEL OR DESIGN. THIS DOCUMENT IS THE SUBJECT OF COPYRIGHT.