	MATERIAL WERKSTOFF MATÉRIAU MATERIAL		SURFACE PROTECTION OBERFLAECHENSCHUTZ PROTECTION DE SURFACE PROTECAO SUPERFICIAL		
I	Al	JED-029M1	Cr	JED-259	
II	Fe	JED-021M3	Zn/Fe	JED-256-1	
III	Fe	JED-051M4	Zn/Fe	JED-256	
IV	Al	JED-077-1	***	JED-007-1	*** ANODIC OXIDATION ANODISCHE OXIDATION OXIDATION ANODIQUE OXIDACAO ANODICA
V	Fe	JED-060-M1	Zn/Fe	JED-256-1	
VI	Fe	STEEL	Zn/Fe	JED-256	©
VII	Fe	JED-051M4	Zn/Fe	JED-256-4	©
VIII	Fe	JED-051M4	Zn/Fe	JED-256	©
IX	Fe	JED-051M4	Zn/Fe	JED-256-1	©

ALL COATINGS FREE FROM CHORMIUM VI
ALLE BESCHICHTUNGEN FREI VON CHRIM VI ©
TOUS LES REVETEMENTS EXEMPTS DE CHROME VI
TODOS REVESTIMENTOS LIVRES DE CROMO HEXAVALENTE

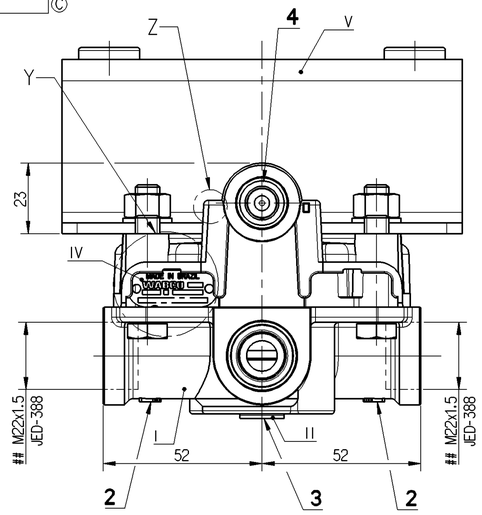

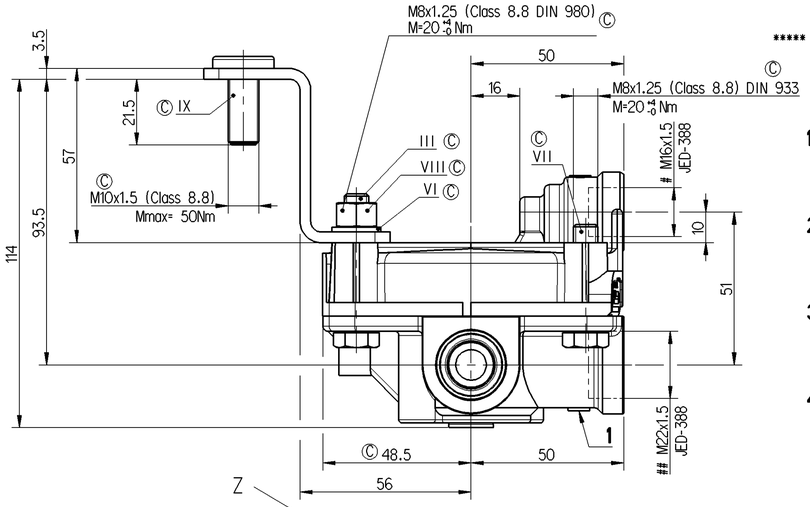

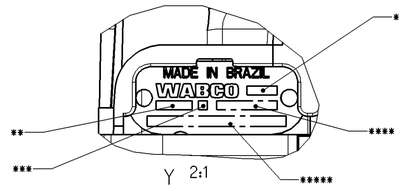

* PRI

** DATE OF MANUFACTURE
HERSTELLDATUM
DATE OF FABRICATION
DATA DE FABRICACAO

*** DATA CODING

**** OPITIONAL
BELIEBIG
A VOLONTE
OPCIONAL

***** WABCO IDENTIFICATION NUMBER
WABCO IDENTIFIKATIONS-NUMMER
WABCO NUMERO D'IDENTIFICATION
WABCO NUMERO DE IDENTIFICACAO

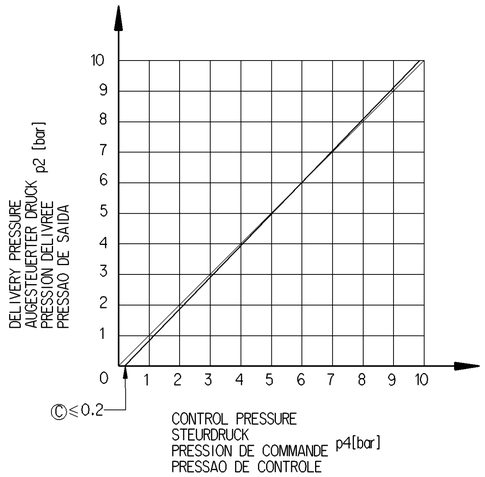

1 SUPPLY
VORRAT
ALIMENTATION
ALIMENTACAO

2 DELIVERY PRESSURE
AUGESTEUERTER DRUCK
PRESSION DELIVREE
PRESSAO DE SAIDA

3 EXHAUST
ENTLUEFTUNG
ECHAPPEMENT
EXAUSTAO

4 CONTROL PRESSURE
STEUERDRUCK
PRESSION DE COMMANDE
PRESSAO DE CONTROLE

THERMAL RANGE OF APPLICATION
THERMISCHER ANWENDUNGSBEREICH
GAMME D'APPLATION THERMIQUE
CAMPO DE APLICACAO TERMICA : -40°C...+80°C

WORKING PRESSURE
BETRIEBSDRUCK
PRESION DE SERVICE
PRESSAO DE TRABALHO : MAX. pe=10bar

TEMPORARY:
KURZZEITIG:
DE COURTE DURÉE:
TEMPORARIA: MAX. pe=13bar

SUPPLY PRESSURE
VORRATSDRUCK
PRESSION D'ALIMENTATION
PRESSAO DE ALIMENTACAO : MAX. pe=13bar

MEDIUM: AIR
MEDIUM: LUFT
FLUIDE: AIR
FLUIDO: AR

© FOR FURTHER INFORMATIONS SEE TECHNICAL SPECIFICATION
WEITERE INFOORMATIONEN SIEHE TECHNISCHE SPEZIFICATION
POUR AUTRES INFORMATION VOIR TECHNIQUE SPECIFICATION
PARA MAIS INFORMACOES CONSULTE ESPECIFICACAO TECNICA

© BRACKET VALID ONLY FOR MAN LA APPLICATIONS
BRACKET NUR GULTIG FUR MAN LA ANWENDUNGEN
SUPPORT VALABLE QUE POUR LES APPLICATIONS MAN LA
SUPORTE VALIDO SOMENTE PARA APLICACOES MAN LA

© MAN LA RESPONSIBLE FOR BRACKET DESIGN
MAN LA VERANTWORTLICH FUR BRACKETDESIGN
MAN LA RESPONSABLE DE LA CONCEPTION DU SUPPORT
MAN LA RESPONSAVEL PELO PROJETO DO SUPORTE

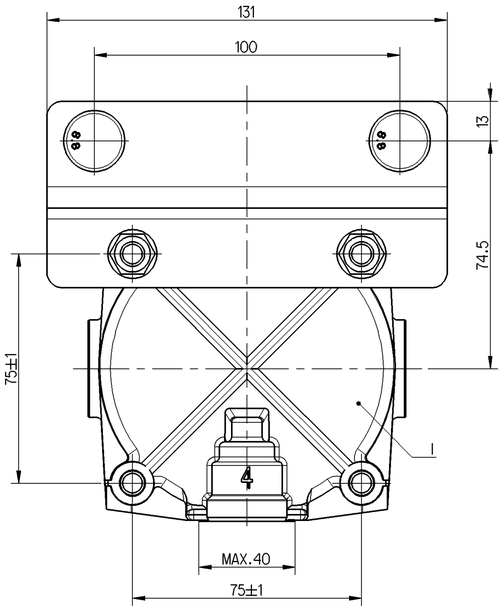

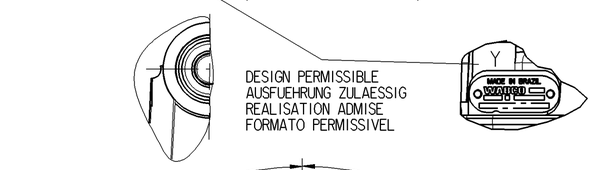

DESIGN PERMISSIBLE
AUSFUEHRUNG ZULAESSIG
REALISATION ADMISE
FORMATO PERMISSIVEL

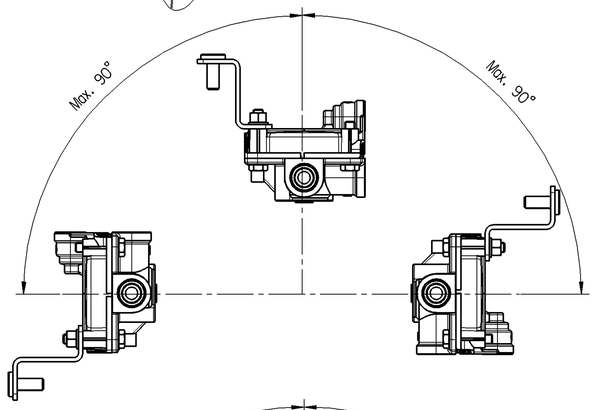

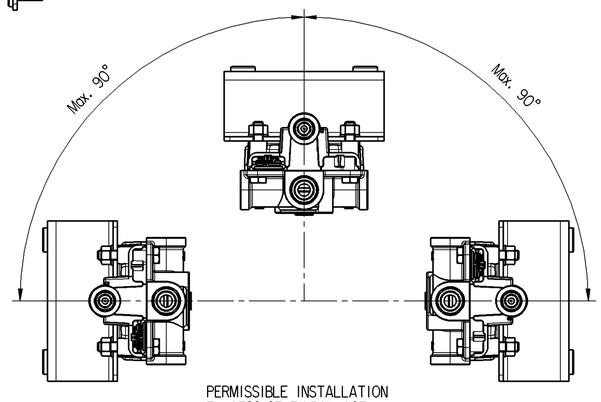

PERMISSIBLE INSTALLATION
ZULAESSIGE EINBAULAGE
POSITION D'INSTALLATION ADMISE
POSICAO DE INSTALACAO PERMITIDA

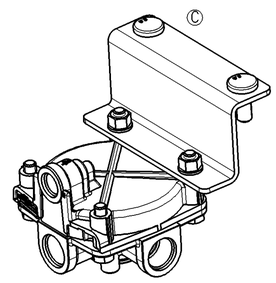

1:2

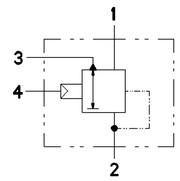

	#	##
TORQUE ACCORDING TO JED-366 ANZUGSMOMENT ENTSPRECHEND JED-366 COUPLE DE SERRAGE SUIVANT JED-366 TORQUE CONFORME JED-366	M16x1.5	M22x1.5
FOR THREAD PERMISSIBLE FUER GEWINDE ZULAESSIG POUR FILETAGE ADMISE PARA ROSCA ADMISSIVEL	Max. 34Nm	Max. 53Nm

General Specification: JED-334-0 , Size ISO 14405-1 E					
Further Technical Data: 9730110420					
Doc. Code: 035		Sheet: 1	To 6		
General Tolerances JED-261					
Range of Nominal Dimensions (± mm)					
Class 1)	≤ 50	> 50 ≤ 180	> 180 ≤ 400	> 400	∢
Fine		0.5	1.0	1.5	2.0	
Medium	X	1.0	2.0	3.0	4.0	±3°
Coarse		2.0	3.5	5.0	6.5	
Tapped Holes acc. ISO-4039 / JED-398					
1) Tolerance Class Applied Crossmarked					

Copyright WABCO®

Date	Signature
Drawn 2013-10-02	Obayashi
Checked 2013-10-04	Nair
Expert Nair	

WABCO

RELAY VALVE
RELAISVENTIL
VALVE RELAIS
VALVULA RELE

Mass	Scale	Material No.	Date of first issue: 2012-04-18		
1.050 KG	1:1 (1:2)(2:1)	973 011 042 0	Doc.Code 005	Language ML	Sheet 1/1
Size A 1	CAD System Pro/E	ECN-No. - / Revision 19x C / Techn. Resp. 5220	Replacement for -		

100mm

Toute Communication ou reproduction de ce document, toute exploitation ou communication de son contenu sont interdites, sauf autorisation expresse. Tout manquement à cette règle constitue un abus évident et expose son auteur au versement de dommages et intérêts. Nous nous réservons le droit de déposer des brevets à partir de ce document.

Weitergabe sowie Vervielfältigung dieser Unterlage, Verwertung und Mitteilung ihres Inhalts nicht gestattet, soweit nicht ausdrücklich zugestanden. Zuwiderhandlungen stellen einen offensichtlichen Mißbrauch dar und verpflichten zu Schadensersatz. Alle Rechte für den Fall der Patenterteilung oder Gebrauchsmustereintragung vorbehalten.

Non è permesso consegnare a terzi o riprodurre questo documento, né utilizzarne il contenuto o renderlo comunque noto a terzi senza esplicita autorizzazione. Ogni infrazione costituisce un evidente abuso e comporterà il dovere di risarcire il danno subito.

Copying of this document and giving it to others and the use or communication of the contents thereof, are forbidden without express authority. Contraventions of this restriction will constitute an evident abuse and result in a liability to the payment of damages. All rights are reserved in the event of the grant of a patent or registration of a utility model or design. The contents of this document is the subject of copyright.