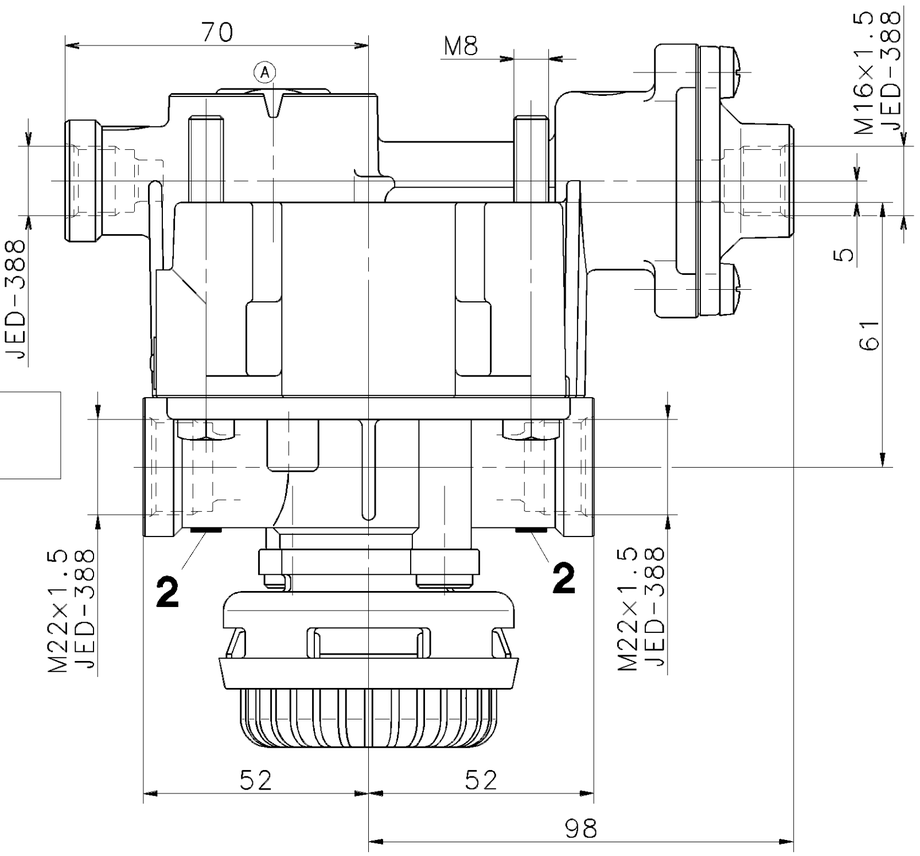

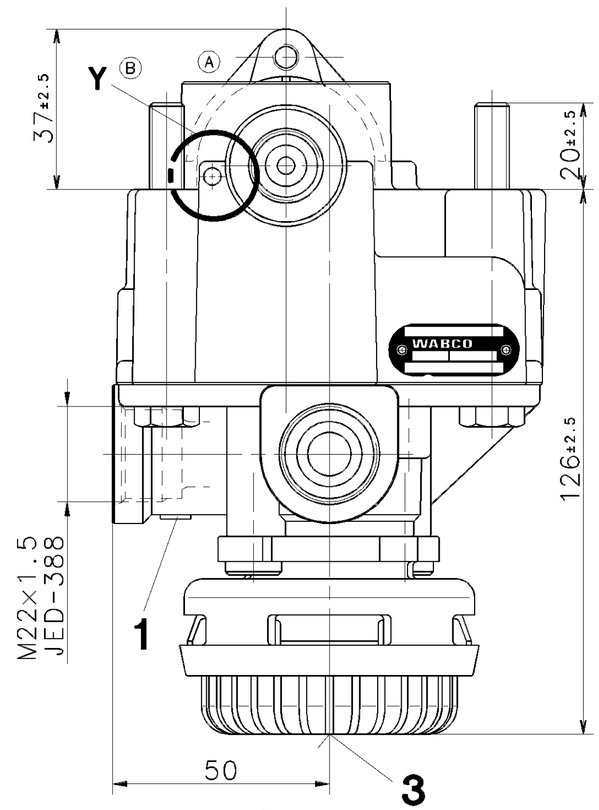

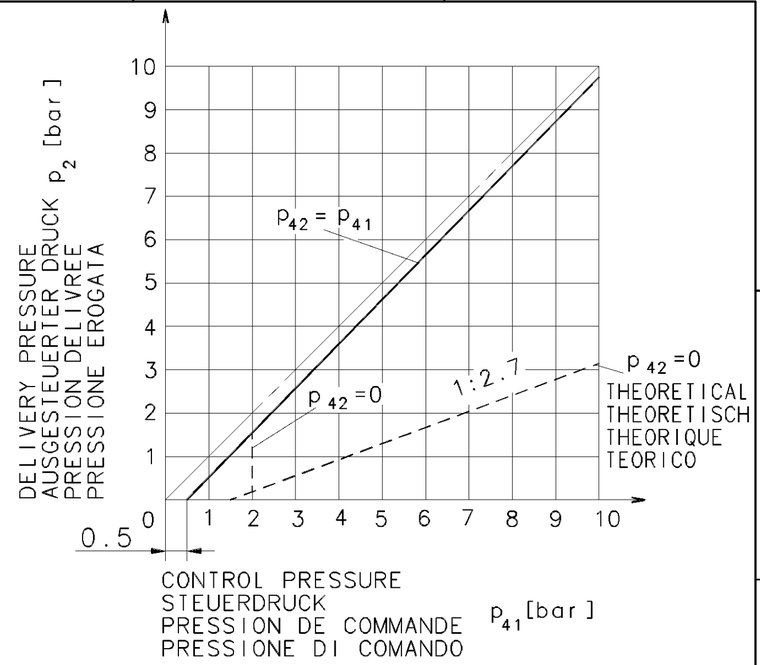

1 SUPPLY
VORRAT
ALIMENTATION
ALIMENTAZIONE
MAX. p_e = 13bar

2 DELIVERY PRESSURE
AUSGESTEUERTER DRUCK
PRESSION DELIVREE
PRESSIONE EROGATA

3 EXHAUST
ENTLUEFTUNG
ECHAPPEMENT
SCARICO

41 CONTROL PRESSURE
STEUERDRUCK
PRESSION DE COMMANDE
PRESSIONE DI COMANDO
MAX. pe = 10bar

42

TEMPORARILY:
KURZZEITIG:
DE COURTE DUREE:
BREVE TEMPO SOLO:
MAX. p_e = 13bar

MARKING
KENNZEICHNUNG
MARQUAGE
CONTRASSEGNO

BROWN
BRAUN
BRUN
BRUNO

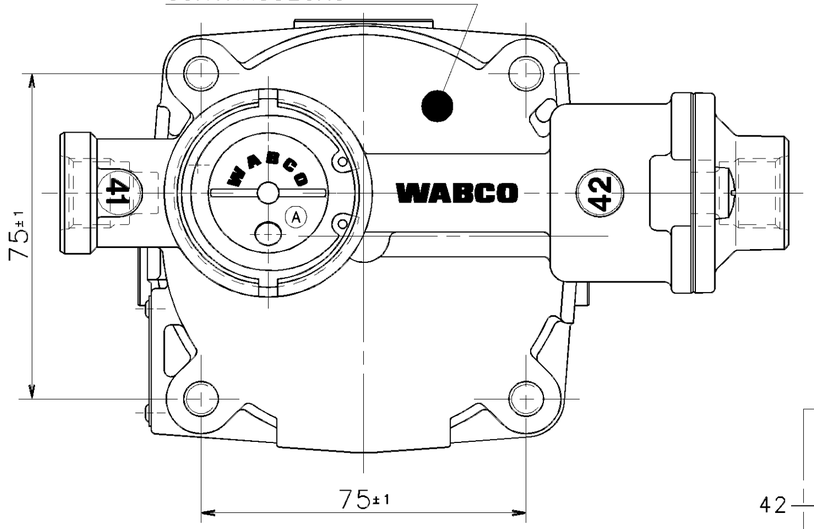

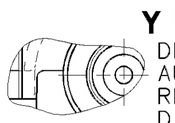

DESIGN PERMISSIBLE
AUSFUEHRUNG ZULAESSIG
REALISATION ADMISE
DISEGNO AMMISSIBILE

MEDIUM: AIR
MEDIUM: LUFT
FLUIDE: AIR
FLUIDO: ARIA

PERMISSIBLE INSTALLATION
ZULAESSIGE EINBAULAGE
POSITION D'INSTALLATION ADMISE
POSIZIONE DI MONTAGGIO AMMESSA
±90°

THERMAL RANGE OF APPLICATION:
THERMISCHER ANWENDUNGSBEREICH:
GAMME D'APPLICATION THERMIQUE:
CAMPO DI APPLICAZIONE TERMICA:
-40° ...+80° C

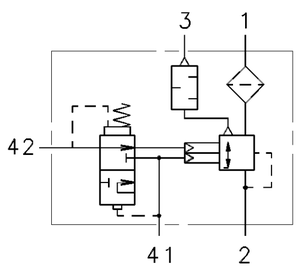

TORQUE FOR CONNECTIONS:
ANZUGSMOMENT FUER EINSCHRAUBSTUTZEN: M16×1.5: $M_{max.}$ = 34 Nm
COUPLE DE SERRAGE DES RACCORDS: M22×1.5: $M_{max.}$ = 53 Nm
COPPIA DI SERRAGGIO DEI RACCORDI:

GENERAL SPECIFICATION: JED-334								
FURTHER TECHNICAL DATA:								
DOC. CODE:		SHEET: TO						
GENERAL TOLERANCES								
CLASS 1)		RANGE OF NOMINAL DIMENSIONS (± mm) ≤50	> 50 ≤180	>180 ≤400	>400			
FINE		0,5	1,0	1,5	2,0			
MEDIUM	X	1,0	2,0	3,0	4,0	± 3°		
COARSE		2,0	3,5	5,0	6,5	070086	2xB	99-06-22
TAPPED HOLES ACC. ISO ~~4039 / JED 152~~ JED-388						066780	4xA	98-10-07
1) TOLERANCE CLASS APPLIED CROSSMARKED						DCN-NO.	REV.	DATE

CADAM-DRAWING COPYRIGHT		WABCO
DATE	SIGNATURE	
DRAWN: 98-02-10	HOERSTMANN	RELAY VALVE RELAISVENTIL VALVE RELAIS VALVOLA RELE
CHECKED: 98-02-10	MENZE	
STANDARDIZATION:		

MASS	SCALE	PRODUCT IDENTIFICATION NO.	DOC. CODE	SHEET
1.39 KG	1:1	973 011 110 0	605	1/1
SIZE A 2	I.R.I. 140	SHAPE CODE	REPLACEMENT FOR	

100mm

EXPERT CODE 7 4 4

PRODUCT TYPE 0 2

TOUTE COMMUNICATION OU REPRODUCTION DE CE DOCUMENT, TOUTE EXPLOITATION OU COMMUNICATION DE SON CONTENU NON E PERMESSO CONSEGNARE A TERZI O RIPRODURRE QUESTO DOCUMENTO, NE UTILIZZARNE IL CONTENUTO O RENDERNE PUBLICO IL CONTENUTO SENZA AUTORIZZAZIONE SCRITTA DELLA WABCO. TUTTI I DIRITTI DERIVANTI DA BREVETTI O MODELLI.
EN VIGUEUR SUR LE PLAN INTERNATIONAL. TOUS DROITS DE PROPRIETE INDUSTRIELLE RESERVES, NOTAMMENT EN MATIERE DE BREVETS ET DE MODELES.
ABUSO E COMPORTERANNO LA RISARCIMENTO DEI DANNI. SUBITO E' FATTA RISERVA DI TUTTI I DERIVANTI DA
WEITERGABE SOWIE VERVIELFAELTIGUNG DIESER UNTERLAGE, VERWERTUNG UND MITTEILUNG IHRES INHALTS NICHT GESTATTET SOWEIT NICHT AUSDRUECKLICH ZUGESTANDEN. ZUWIDERHANDLUNGEN VERPFLICHTEN ZU SCHADENERSATZ. ALLE RECHTE FUER DEN FALL DER PATENTERTEILUNG ODER GEBRAUCHSMUSTER-EINTRAGUNG VORBEHALTEN.
COPYING OF THIS DOCUMENT AND GIVING IT TO OTHERS AND THE USE OR COMMUNICATION OF THE CONTENTS THEREOF, ARE FORBIDDEN WITHOUT EXPRESS AUTHORITY. OFFENDERS ARE LIABLE TO PAY DAMAGES. ALL RIGHTS ARE RESERVED IN THE EVENT OF THE GRANT OF PATENT OR REGISTRATION OF A UTILITY MODEL OR DESIGN. THIS DOCUMENT IS THE SUBJECT OF COPYRIGHT.

1009/012/3/04.93
605/653