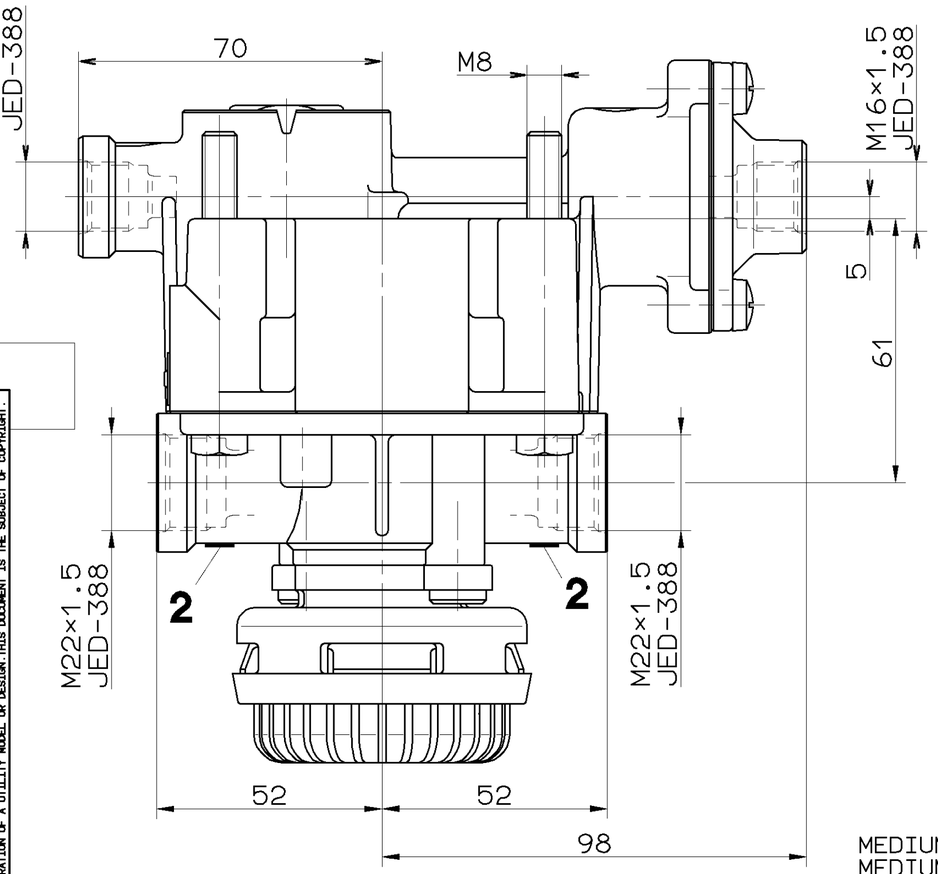

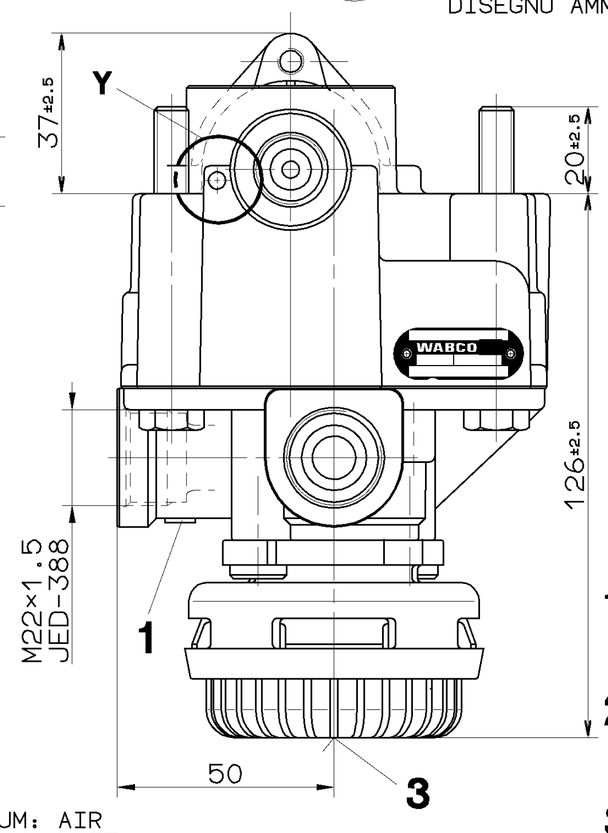

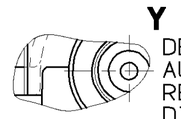

DESIGN PERMISSIBLE
AUSFUEHRUNG ZULAESSIG
REALISATION ADMISE
DISEGNO AMMISSIBILE

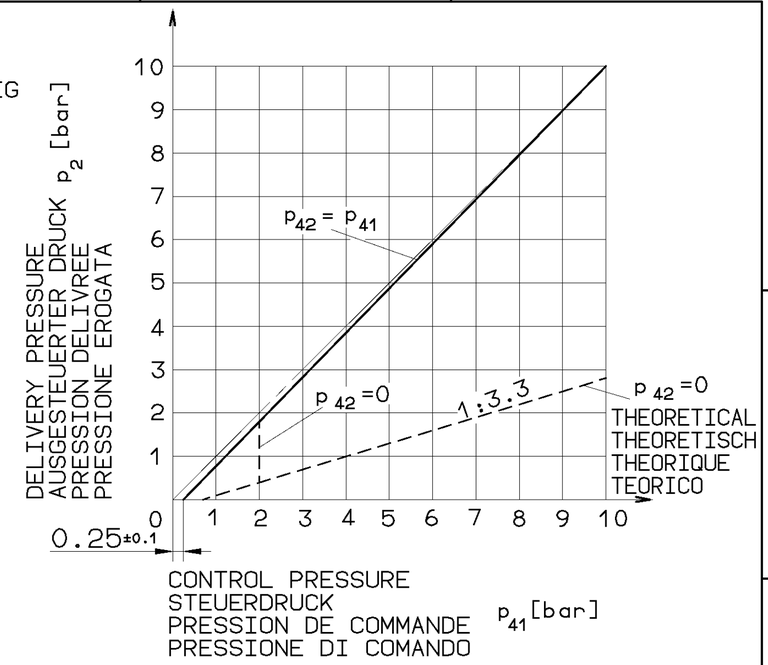

1 SUPPLY
VORRAT
ALIMENTATION
ALIMENTAZIONE
MAX. p_e = 13bar

2 DELIVERY PRESSURE
AUSGESTEUERTER DRUCK
PRESSION DELIVREE
PRESSIONE EROGATA

3 EXHAUST
ENTLUEFTUNG
ECHAPPEMENT
SCARICO

41 CONTROL PRESSURE
STEUERDRUCK
PRESSION DE COMMANDE
PRESSIONE DI COMANDO
MAX. p_e = 10bar

42

TEMPORARILY:
KURZZEITIG: MAX. p_e = 13bar
DE COURTE DUREE:
BREVE TEMPO SOLO:

MEDIUM: AIR
MEDIUM: LUFT
FLUIDE: AIR
FLUIDO: ARIA

PERMISSIBLE INSTALLATION
ZULAESSIGE EINBAULAGE
POSITION D'INSTALLATION ADMISE
POSIZIONE DI MONTAGGIO AMMESSA ±90°

THERMAL RANGE OF APPLICATION:
THERMISCHER ANWENDUNGSBEREICH:
GAMME D'APPLICATION THERMIQUE:
CAMPO DI APPLICAZIONE TERMICA: -40° ...+80° C

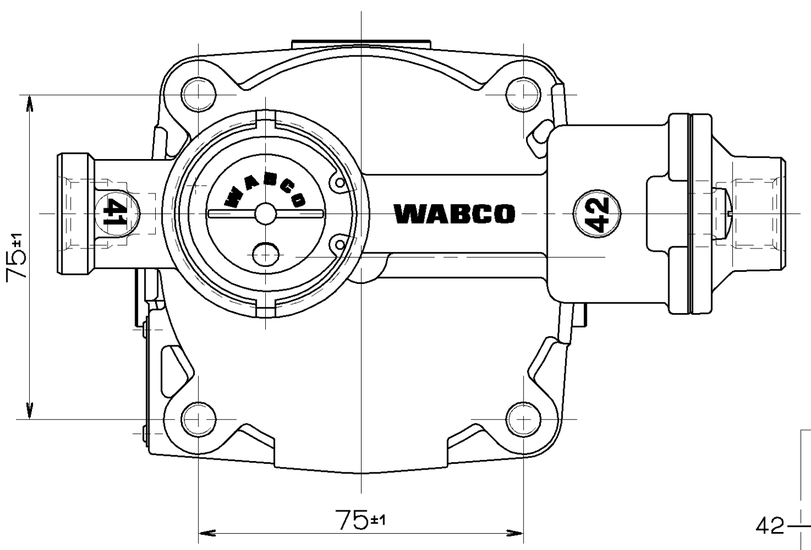

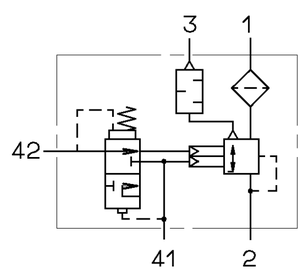

TORQUE FOR CONNECTIONS:
ANZUGSMOMENT FUER EINSCHRAUBSTUTZEN: M16×1.5: $M_{max.}$ = 34 Nm
COUPLE DE SERRAGE DES RACCORDS: M22×1.5: $M_{max.}$ = 53 Nm
COPPIA DI SERRAGGIO DEI RACCORDI:

GENERAL SPECIFICATION: JED-334					
FURTHER TECHNICAL DATA:					
DOC. CODE:	SHEET: TO				
GENERAL TOLERANCES					
CLASS 1)	RANGE OF NOMINAL DIMENSIONS (± mm) ≤50	> 50 ≤180	>180 ≤400	>400	∡
FINE	0,5	1,0	1,5	2,0	
MEDIUM X	1,0	2,0	3,0	4,0	± 3°
COARSE	2,0	3,5	5,0	6,5	
TAPPED HOLES ACC. ISO ~~4039 / JED 152~~ JED-388					
1) TOLERANCE CLASS APPLIED CROSSMARKED					

DCN-NO.	REV.	DATE

100mm

CADAM-DRAWING COPYRIGHT		
DATE	SIGNATURE	
DRAWN: 99-06-11	ELZE	
CHECKED: 99-06-11	MENZE	
STANDARDIZATION:		

WABCO

RELAY VALVE
RELAISVENTIL
VALVE RELAIS
VALVOLA RELE

MASS	SCALE	PRODUCT IDENTIFICATION NO.	DOC. CODE	SHEET
1.41 KG	1:1	973 011 111 0	605	1/1
SIZE A 2	T.R.I. 140	SHAPE CODE	REPLACEMENT FOR 884 012 134 0 OF 98-10-01	

EXPERT CODE 7 4 4

PRODUCT TYPE 0 2 X

1809/012/3/04.93

605/653

TOUTE COMMUNICATION OU REPRODUCTION DE CE DOCUMENT, TOUTE EXPLOITATION OU COMMUNICATION DE SON CONTENU SONT INTERDITES SAUF AUTORISATION EXPRESSE. TOUS DROITS DE PROPRIETE INDUSTRIELLE RESERVES, NOTAMMENT EN MATIERE DE BREVETS ET DE MODELES.
NON E PERMESSO CONSEGNARE A TERZI O RIPRODURRE QUESTO DOCUMENTO, NE UTILIZZARNE IL CONTENUTO O RENDERNE NOTO A TERZI SENZA ESPLICITA AUTORIZZAZIONE. TUTTI I DIRITTI DI PROPRIETA' INDUSTRIALE SONO RISERVATI, SOPRATTUTTO I DIRITTI DI BREVETTO O MODELLI.
NEITERGABE SOWIE VERVIELFAELTIGUNG DIESES UNTERLAGE, VERWENDUNG UND MITTEILUNG IHRES INHALTS NICHT GESTATTET WENN NICHT AUSDRUECKLICH ZugESTANDEN. ALLE RECHTE FUER DEN FALL DER PATENTERTEILUNG ODER MIESSBRAUCH DAR UND VERMPFLICHTEN ZU SCHADENERSATZ. ALLE RECHTE FUER DEN FALL DER PATENTERTEILUNG ODER GEBRAUCHSMUSTER-EINTRAGUNG VORBEHALTEN.
COPYING OF THIS DOCUMENT AND GIVING IT TO OTHERS AND USE OF ITS CONTENTS IS PROHIBITED WITHOUT EXPRESS AUTHORITY. ALL RIGHTS ARE RESERVED IN THE EVENT OF THE GRANT OF PATENT OR REGISTRATION OF A UTILITY MODEL OR DESIGN. THIS DOCUMENT IS THE SUBJECT OF COPYRIGHT.