ASSEMBLY PROCEDURE:

(a)

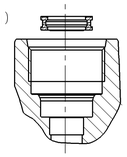

THE SPRING ELEMENT IS INSERTED INTO THE CHAMBER UNDER THE THREAD ROOT OF THE CONNECTION BORE (a) AND (b).

(b)

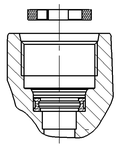

THE RETAINING CLIP IS INTRODUCED SO THAT IT RESTS FLAT ON THE THREAD ROOT (b) AND (c). THE SPRING ELEMENT AND RETAINING CLIP ARE SYMMETRICAL.

(c)

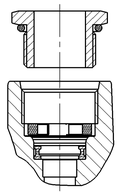

THE MALE FITTING PRE-ASSEMBLED WITH THE PRE-GREASED O-RING TO SEAL THE THREAD IS SCREWED BY HAND INTO THE TAPPED BORE (c) AND TIGHTENED.

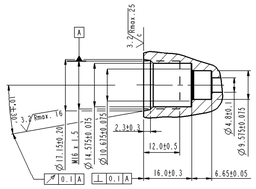

DETAILS OF PORT MACHINING FOR M16x1.5

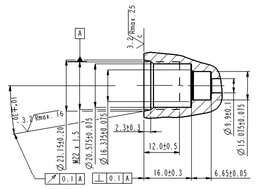

DETAILS OF PORT MACHINING FOR M22x1.5

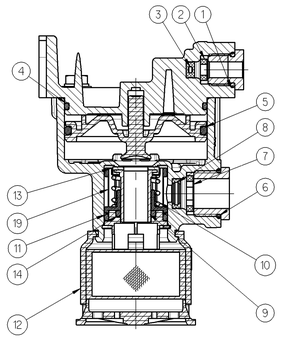

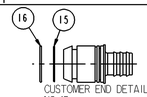

CUSTOMER END DETAIL NG-12

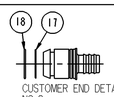

CUSTOMER END DETAIL NG-8

MSP 3/94 REPAIR KIT CONSISTS OF ITEMS SHOWN

ITEM No.	WABCO PART No.	DESCRIPTION	QTY
1	893 220 428 2	SEALING RING NG-8	1
2	895 226 706 4	RETAINER CLIP NG-8	1
3	895 370 005 4	SPRING ELEMENT NG-8	1
4	897 980 104 4	SEALING RING	1
5	897 980 133 4	SEALING RING	1
6	893 220 427 2	SEALING RING NG-12	3
7	895 226 697 4	RETAINER CLIP NG-12	3
8	895 370 004 4	SPRING ELEMENT NG-12	3
9	899 500 014 2	VALVE	1
10	896 070 110 4	VALVE SPRING	1
11	897 980 105 4	SEALING RING	1
12	973 298 534 2	SILENCER ASSEMBLY	1
13	899 980 000 4	VALVE GUIDE	1
14	897 980 222 4	SEALING RING	1
15	897 980 146 4	SEALING RING NG-12	3
16	897 980 153 4	SEALING RING NG-12	3
17	897 980 145 4	SEALING RING NG-8	1
18	897 980 156 4	SEALING RING NG-8	1
19	973 298 225 4	FILTER	1
20	830 503 096 4	SILICONE GREASE SACHET	1

PART No. 8951800024 AND 8979802304 PROVIDED IN THE KIT TO STANDARDISE THE REPAIR KIT FOR RELAY VALVE VARIANTS.

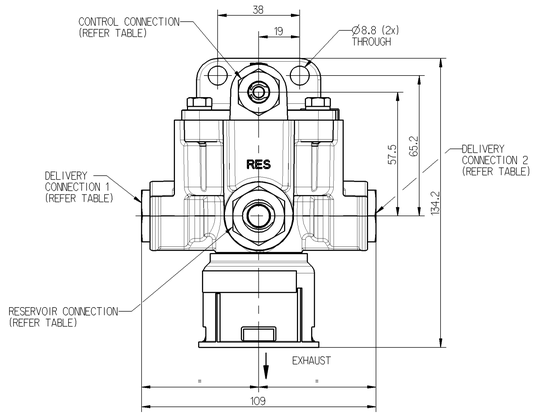

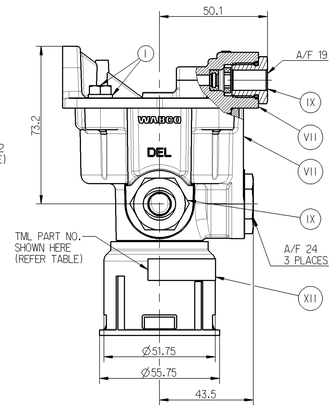

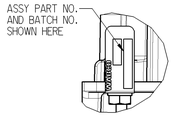

VIEW P

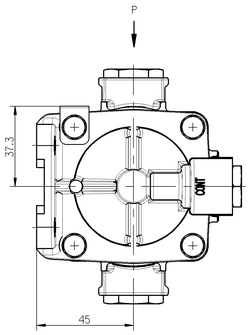

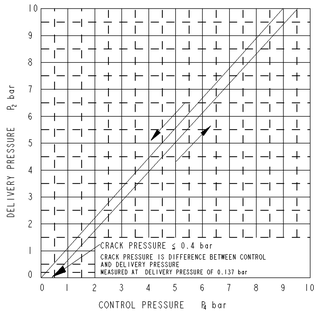

PRESSURE CHANGE RATE 0.137 bar/sec AS PER SAE J1859

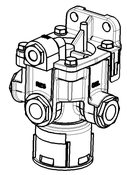

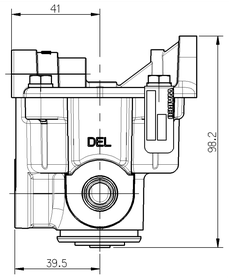

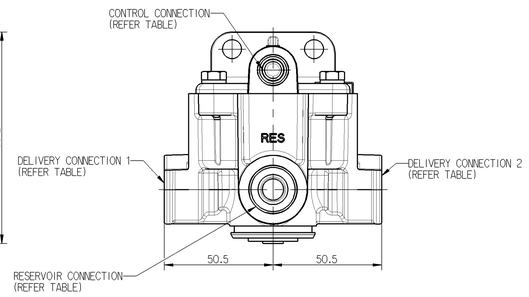

(D)
FIG Y
OTHER DIMENSIONS REFER BASIC DRAWING

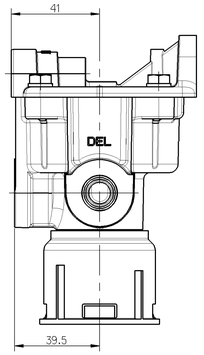

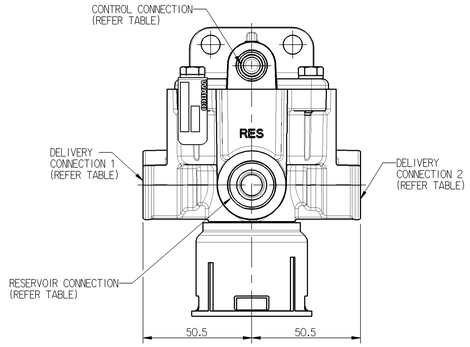

(D)
FIG Z
OTHER DIMENSIONS REFER BASIC DRAWING

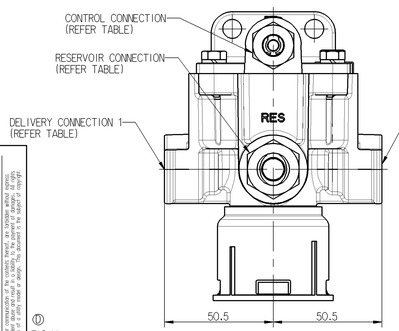

(D)
FIG V
OTHER DIMENSIONS REFER BASIC DRAWING

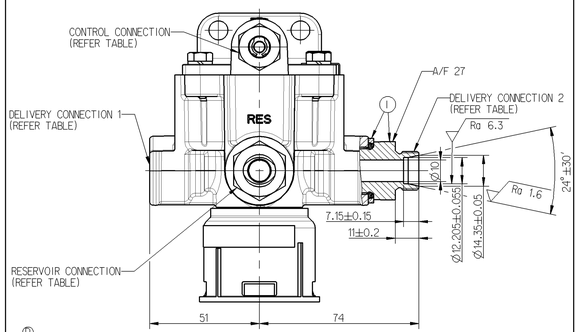

(D)
FIG X
OTHER DIMENSIONS REFER BASIC DRAWING

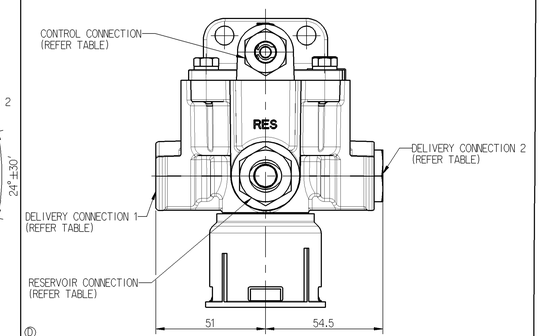

(D)
FIG U
OTHER DIMENSIONS REFER BASIC DRAWING

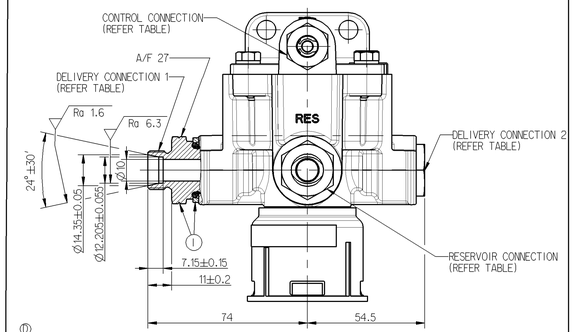

(D)
FIG T
OTHER DIMENSIONS REFER BASIC DRAWING

SL. No.	TECHNICAL DATA	
1	WORKING MEDIUM	AIR
2	THERMAL RANGE OF APPLICATION	-40°C TO +80°C
3	NORMAL WORKING PRESSURE	10 bar
4	MAXIMUM WORKING PRESSURE (TEMP)	13 bar
5	NOISE LEVEL AT EXHAUST	72 dB(A) MAXIMUM
6	EQUIVALENT FLOW DIAMETER	10 mm
7	QUALITY COMPLIANCE PLAN ARE CONDUCTED REGULARLY AS PER CLAUSE No. 15 OF PS 973 298 018 0	
8	SERVICE LIFE TO FIRST OVERHAUL 3 YEARS / 300000 KM WHICHEVER IS EARLIER IF FITTED AS PER RECOMMENDED LAYOUT	
9	NO AIR LEAKAGE IS PERMISSIBLE AT THE JOINT BETWEEN ADAPTOR AND RELAY VALVE	
10	OPEN PORTS ARE FITTED WITH CLOSURE PLUGS FOR STORAGE AND TRANSIT PURPOSES	
11	INSTALLATION : REFER FIGURE S	

O x <1> - SAFETY CHARACTERISTICS

O x <2> - SIGNIFICANT CHARACTERISTICS

(D) *

PART No.	RESERVOIR CONNECTION	CONTROL CONNECTION	DELIVERY CONNECTION 1	DELIVERY CONNECTION 2	FIG. REFERENCE	WEIGHT (Kg)	TML PART No.
973 298 018 0	M22X1.5 TO SUIT VOSS PLUG IN SYSTEM 230. TORQUE 10±1 Nm	M16X1.5 TO SUIT VOSS PLUG IN SYSTEM 230. TORQUE 10±1 Nm	M22x1.5, TO SUIT VOSS PLUG IN SYSTEM 230, TORQUE 10±1 Nm.	M22x1.5, TO SUIT VOSS PLUG IN SYSTEM 230, TORQUE 10±1 Nm.	BASIC DRAWING	0.648	2782 4370 0147
973 298 097 0	M22X1.5 TO SUIT VOSS PLUG IN SYSTEM 230. TORQUE 10±1 Nm	M16X1.5 TO SUIT VOSS PLUG IN SYSTEM 230. TORQUE 10±1 Nm	M18x1.5 TORQUE 37.5±2.5 Nm	M22x1.5, TO SUIT VOSS PLUG IN SYSTEM 230, TORQUE 10±1 Nm.	FIG T	0.689	2839 4370 0119
973 298 028 0	M22X1.5 TO SUIT VOSS PLUG IN SYSTEM 230. TORQUE 10±1 Nm	M16X1.5 TO SUIT VOSS PLUG IN SYSTEM 230. TORQUE 10±1 Nm	PLUGGED AS CAST	M22x1.5, TO SUIT VOSS PLUG IN SYSTEM 230, TORQUE 10±1 Nm.	FIG U	0.635	2839 4370 0118
973 298 099 0	M22X1.5 TO SUIT VOSS PLUG IN SYSTEM 230. TORQUE 10±1 Nm	M16X1.5 TO SUIT VOSS PLUG IN SYSTEM 230. TORQUE 10±1 Nm	M22x1.5 TORQUE 50.5±2.5 Nm	M22x1.5 TORQUE 50.5±2.5 Nm	FIG V	0.601	2880 4370 0194
973 298 124 0	M22X1.5 TO SUIT VOSS PLUG IN SYSTEM 230. TORQUE 10±1 Nm	M16X1.5 TO SUIT VOSS PLUG IN SYSTEM 230. TORQUE 10±1 Nm	PLUGGED AS CAST	M18X1.5 TORQUE 37.5±2.5 Nm	FIG X	0.692	2846 4371 0130
973 298 101 0	M22x1.5-DEEP 13 TORQUE 50.5±2.5 Nm	M14x1.5-DEEP 12 TORQUE 23.5±1.5 Nm	M16x1.5-DEEP 12 TORQUE 32.5±1.5 Nm	M16x1.5-DEEP 12 TORQUE 32.5±1.5 Nm	FIG Y	0.462	2782 4210 0101
973 298 103 0	M22x1.5-DEEP 13 TORQUE 50.5±2.5 Nm	M14x1.5-DEEP 12 TORQUE 23.5±1.5 Nm	M16x1.5-DEEP 12 TORQUE 32.5±1.5 Nm	M16x1.5-DEEP 12 TORQUE 32.5±1.5 Nm	FIG Z	0.535	2782 4370 0154

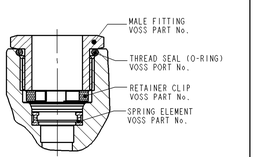

DESCRIPTION	M22x1.5 VOSS PART No.	M16x1.5 VOSS PART No.
MALE FITTING	00 62 03 99 00	00 62 02 99 00
RETAINER CLIP	00 62 01 90 00	00 62 00 90 00
SPRING ELEMENT	00 62 05 99 00	00 62 04 99 00

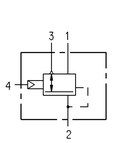

1. RESERVOIR PORT
2. DELIVERY PORT
3. EXHAUST
4. CONTROL PORT

SCHEMATIC DIAGRAM

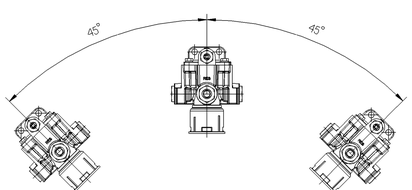

PERMISSIBLE INSTALLATION POSITION FIGURE S

PART CODE	MATERIAL	SURFACE PROTECTION
XVII	STEEL	NO TREATMENT
XVI	CAST IRON	PLATED
XV	STEEL	ZINC IRON PLATED
XIV	CAST IRON	NO TREATMENT
XIII	ZINC ALLOY	ANODISED
XII	PLASTIC	NO TREATMENT
XI	RUBBER	NO TREATMENT
X	STAINLESS STEEL	NO TREATMENT
IX	BRASS	NO TREATMENT
VIII	ZINC ALLOY	CHROMATED
VII	ALUMINIUM ALLOY	ANODISED
VI	ALUMINIUM ALLOY	CHROMATED
V	CAST IRON	PAINTED
IV	STEEL	POWDER COATED
III	STEEL	PAINTED
II	STEEL	PHOSPHATED
I	STEEL	ZINC PLATED

Trade Communication is reproducible at an disposal, trade, exploitable or communicable to third parties not permitted, and patent, utility model, design, trademark, copyright and other property rights may exist. We reserve all rights. Copyright © WABCO Europe BVBA/SPRL. Copyright © WABCO Deutschland GmbH. Copyright © WABCO Automotive S.r.l. Copyright © WABCO Automotive Brasil Ltda. Copyright © WABCO Automotive India Limited. Copyright © WABCO Automotive Korea Co. Ltd. Copyright © WABCO Automotive Czech s.r.o. Copyright © WABCO Automotive Romania S.R.L. Copyright © WABCO Automotive Hungary Kft. Copyright © WABCO Automotive Slovakia s.r.o. Copyright © WABCO Automotive Poland Sp. z o.o. Copyright © WABCO Automotive Spain S.A. Copyright © WABCO Automotive Portugal Unipessoal Lda. Copyright © WABCO Automotive Sales Japan Co. Ltd. Copyright © WABCO Automotive Sales Korea Co. Ltd. Copyright © WABCO Automotive Sales Shanghai Co. Ltd. Copyright © WABCO Automotive Sales Thailand Co. Ltd. Copyright © WABCO Automotive Sales Malaysia Sdn. Bhd. Copyright © WABCO Automotive Sales Singapore Pte. Ltd. Copyright © WABCO Automotive Sales Australia Pty. Ltd. Copyright © WABCO Automotive Sales Mexico S.A. de C.V. Copyright © WABCO Automotive Sales Argentina S.A. Copyright © WABCO Automotive Sales Chile Limitada. Copyright © WABCO Automotive Sales Colombia Ltda. Copyright © WABCO Automotive Sales Venezuela C.A. Copyright © WABCO Automotive Sales Peru S.A.C. Copyright © WABCO Automotive Sales Ecuador Cia. Ltda. Copyright © WABCO Automotive Sales Uruguay S.A. Copyright © WABCO Automotive Sales Bolivia Ltda. Copyright © WABCO Automotive Sales Paraguay S.A. Copyright © WABCO Automotive Sales Panama S.A. Copyright © WABCO Automotive Sales Costa Rica S.A. Copyright © WABCO Automotive Sales Guatemala S.A. Copyright © WABCO Automotive Sales Honduras S.A. Copyright © WABCO Automotive Sales Nicaragua S.A. Copyright © WABCO Automotive Sales El Salvador S.A. Copyright © WABCO Automotive Sales Dominican Republic S.A. Copyright © WABCO Automotive Sales Puerto Rico Inc. Copyright © WABCO Automotive Sales Canada Inc. Copyright © WABCO Automotive Sales Philippines Inc. Copyright © WABCO Automotive Sales Taiwan Co. Ltd. Copyright © WABCO Automotive Sales Turkey Ticaret Limited Şirketi. Copyright © WABCO Automotive Sales Egypt LLC. Copyright © WABCO Automotive Sales Morocco S.A.R.L. Copyright © WABCO Automotive Sales Algeria S.A.R.L. Copyright © WABCO Automotive Sales Tunisia S.A.R.L. Copyright © WABCO Automotive Sales Saudi Arabia Co. Ltd. Copyright © WABCO Automotive Sales Dubai Co. Ltd. Copyright © WABCO Automotive Sales Qatar W.L.L. Copyright © WABCO Automotive Sales Kuwait W.L.L. Copyright © WABCO Automotive Sales Bahrain W.L.L. Copyright © WABCO Automotive Sales Oman L.L.C. Copyright © WABCO Automotive Sales Jordan L.L.C. Copyright © WABCO Automotive Sales Lebanon S.A.L. Copyright © WABCO Automotive Sales Israel Ltd. Copyright © WABCO Automotive Sales Pakistan Pvt. Ltd. Copyright © WABCO Automotive Sales Bangladesh Ltd. Copyright © WABCO Automotive Sales Sri Lanka Ltd. Copyright © WABCO Automotive Sales Nepal Pvt. Ltd. Copyright © WABCO Automotive Sales Kenya Ltd. Copyright © WABCO Automotive Sales Nigeria Ltd. Copyright © WABCO Automotive Sales South Africa (Pty) Ltd. Copyright © WABCO Automotive Sales Ghana Ltd. Copyright © WABCO Automotive Sales Tanzania Ltd. Copyright © WABCO Automotive Sales Uganda Ltd. Copyright © WABCO Automotive Sales Zambia Ltd. Copyright © WABCO Automotive Sales Zimbabwe (Pvt) Ltd. Copyright © WABCO Automotive Sales Mozambique Lda. Copyright © WABCO Automotive Sales Angola Lda. Copyright © WABCO Automotive Sales Namibia (Pty) Ltd. Copyright © WABCO Automotive Sales Botswana (Pty) Ltd. Copyright © WABCO Automotive Sales Malawi Ltd. Copyright © WABCO Automotive Sales Mauritius Ltd. Copyright © WABCO Automotive Sales Reunion S.A.R.L. Copyright © WABCO Automotive Sales Madagascar S.A.R.L. Copyright © WABCO Automotive Sales Seychelles Ltd. Copyright © WABCO Automotive Sales Ethiopia Ltd. Copyright © WABCO Automotive Sales Sudan Co. Ltd. Copyright © WABCO Automotive Sales Yemen Co. Ltd. Copyright © WABCO Automotive Sales Iraq Co. Ltd. Copyright © WABCO Automotive Sales Iran Co. Ltd. Copyright © WABCO Automotive Sales Afghanistan Co. Ltd. Copyright © WABCO Automotive Sales Kazakhstan LLP. Copyright © WABCO Automotive Sales Uzbekistan LLC. Copyright © WABCO Automotive Sales Russia LLC. Copyright © WABCO Automotive Sales Ukraine LLC. Copyright © WABCO Automotive Sales Belarus LLC. Copyright © WABCO Automotive Sales Moldova S.R.L. Copyright © WABCO Automotive Sales Georgia LLC. Copyright © WABCO Automotive Sales Armenia LLC. Copyright © WABCO Automotive Sales Azerbaijan LLC. Copyright © WABCO Automotive Sales Kyrgyzstan LLC. Copyright © WABCO Automotive Sales Tajikistan LLC. Copyright © WABCO Automotive Sales Turkmenistan LLC. Copyright © WABCO Automotive Sales Mongolia LLC. Copyright © WABCO Automotive Sales Vietnam Co. Ltd. Copyright © WABCO Automotive Sales Cambodia Co. Ltd. Copyright © WABCO Automotive Sales Laos Co. Ltd. Copyright © WABCO Automotive Sales Myanmar Co. Ltd. Copyright © WABCO Automotive Sales Brunei Co. Ltd. Copyright © WABCO Automotive Sales Papua New Guinea Co. Ltd. Copyright © WABCO Automotive Sales Fiji Co. Ltd. Copyright © WABCO Automotive Sales Vanuatu Co. Ltd. Copyright © WABCO Automotive Sales Solomon Islands Co. Ltd. Copyright © WABCO Automotive Sales Samoa Co. Ltd. Copyright © WABCO Automotive Sales Tonga Co. Ltd. Copyright © WABCO Automotive Sales Cook Islands Co. Ltd. Copyright © WABCO Automotive Sales Niue Co. Ltd. Copyright © WABCO Automotive Sales Tuvalu Co. Ltd. Copyright © WABCO Automotive Sales Kiribati Co. Ltd. Copyright © WABCO Automotive Sales Nauru Co. Ltd. Copyright © WABCO Automotive Sales Palau Co. Ltd. Copyright © WABCO Automotive Sales Micronesia Co. Ltd. Copyright © WABCO Automotive Sales Marshall Islands Co. Ltd. Copyright © WABCO Automotive Sales Guam Co. Ltd. Copyright © WABCO Automotive Sales Saipan Co. Ltd. Copyright © WABCO Automotive Sales Wake Island Co. Ltd. Copyright © WABCO Automotive Sales Midway Islands Co. Ltd. Copyright © WABCO Automotive Sales Johnston Atoll Co. Ltd. Copyright © WABCO Automotive Sales Kingman Reef Co. Ltd. Copyright © WABCO Automotive Sales Palmyra Atoll Co. Ltd. Copyright © WABCO Automotive Sales Jarvis Island Co. Ltd. Copyright © WABCO Automotive Sales Baker Island Co. Ltd. Copyright © WABCO Automotive Sales Howland Island Co. Ltd. Copyright © WABCO Automotive Sales Navassa Island Co. Ltd. Copyright © WABCO Automotive Sales Wake Island Co. Ltd. Copyright © WABCO Automotive Sales Midway Islands Co. Ltd. Copyright © WABCO Automotive Sales Johnston Atoll Co. Ltd. Copyright © WABCO Automotive Sales Kingman Reef Co. Ltd. Copyright © WABCO Automotive Sales Palmyra Atoll Co. Ltd. Copyright © WABCO Automotive Sales Jarvis Island Co. Ltd. Copyright © WABCO Automotive Sales Baker Island Co. Ltd. Copyright © WABCO Automotive Sales Howland Island Co. Ltd. Copyright © WABCO Automotive Sales Navassa Island Co. Ltd.

General Specification: JED-334-O		Copyright WABCO®	WABCO
Further Technical Data: 973 298 018 0		Date / Signature	RELAY VALVE, RG2
Doc. Code: 035	Sheet: 1 To 8	Drawn: 2013-07-09 Vinod	
General Tolerances JED-261		Checked: 2013-07-09 Hamesd	
Range of Nominal Dimensions (± mm)		Expert: A Ganesamoorthy	
Class 11	± 50 ± 180 ± 400 ± 400		
Fine	0.5 1.0 1.5 2.0		
Medium	1.0 2.0 3.0 4.0 ±5°		
Coarse	2.0 3.5 5.0 6.5		
Tapped Holes acc. JED-152, JED-686, JED-388			
11 Tolerance Class Applied Crosshatched			

Mass	Scale	Material No.	Date of first issue: 2011-10-04
KG	1:1	973 298 018 0	Doc.Code: 053 Language: EN Sheet: 1/1
Size: A 0	CAD System: Pro/E	ECR-No.: 161685 Revision: 7 D Techn. Resp.: 5220.WIN	Replacement for: /

100mm