Merkmale nach WICF_C2_0008
Characteristics acc. to WICF_C2_0008

C 0(0)	S 0(0)

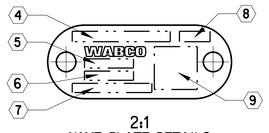

2:1
NAME PLATE DETAILS

4	CUSTOMER PART NUMBER
5	BATCH CODE
6	SERIAL NUMBER
7	DEVICE PART NUMBER
8	PRI CODE
9	2D DATA MATRIX

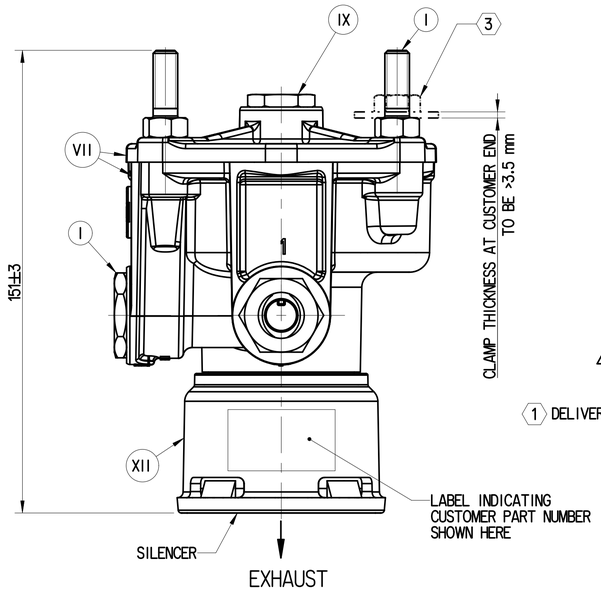

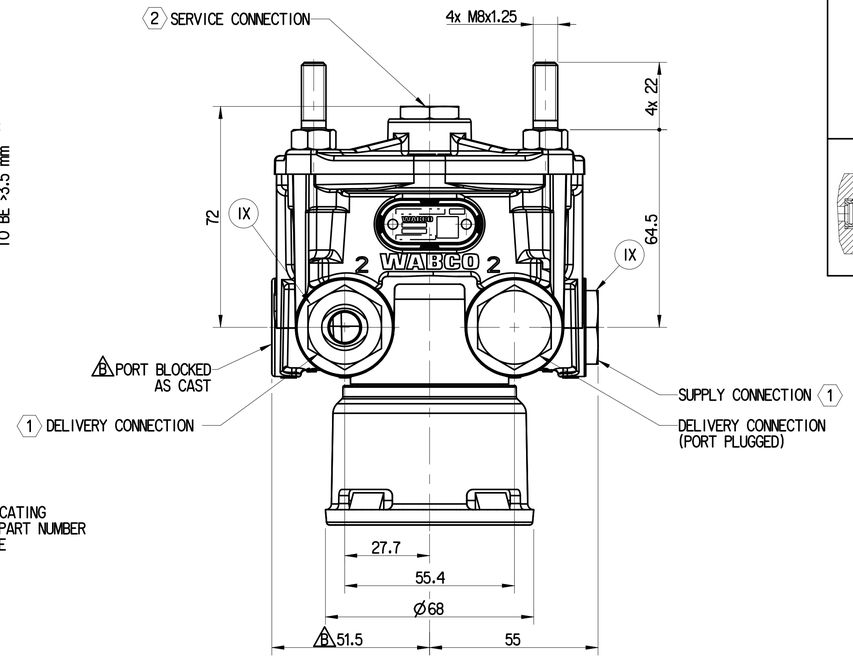

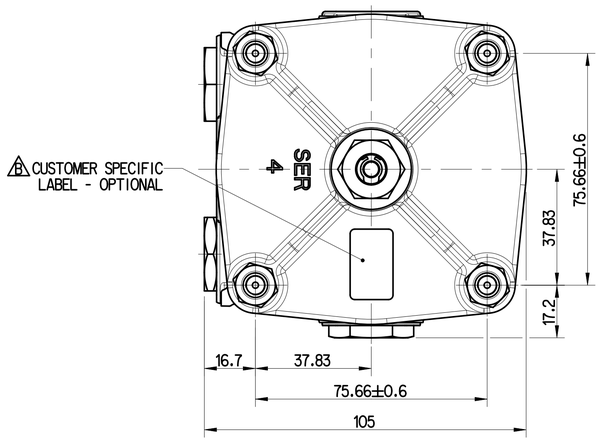

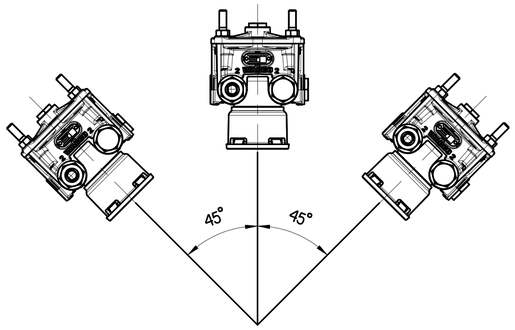

PERMISSIBLE INSTALLATION POSITION
FIGURE U

ASSEMBLY PROCEDURE:

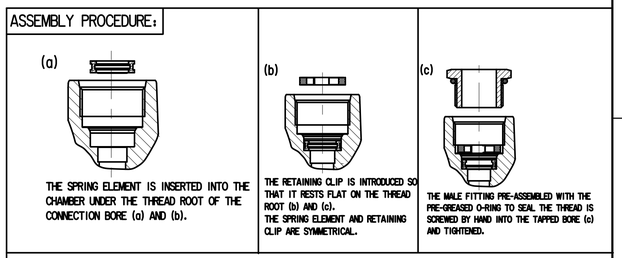

(a) THE SPRING ELEMENT IS INSERTED INTO THE CHAMBER UNDER THE THREAD ROOT OF THE CONNECTION BORE (a) AND (b).

(b) THE RETAINING CLIP IS INTRODUCED SO THAT IT RESTS FLAT ON THE THREAD ROOT (b) AND (c).
THE SPRING ELEMENT AND RETAINING CLIP ARE SYMMETRICAL.

(c) THE MALE FITTING PRE-ASSEMBLED WITH THE PRE-GREASED O-RING TO SEAL THE THREAD IS SCREWED BY HAND INTO THE TAPPED BORE (c) AND TIGHTENED.

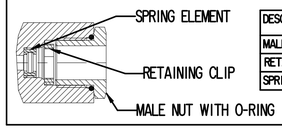

DESCRIPTION	M22x1.5 VOSS PART No.	M16x1.5 VOSS PART No.
MALE NUT WITH O-RING	00 62 03 99 00	00 62 02 99 00
RETAINING CLIP	00 62 01 90 00	00 62 00 90 00
SPRING ELEMENT	00 62 05 99 00	00 62 04 99 00

S.No.	NOTES	
1	PRODUCT FUNCTION AND RELIABILITY	
1.1	WORKING MEDIUM	AIR
1.2	NORMAL WORKING PRESSURE	10 bar
1.3	MAXIMUM OPERATING PRESSURE (TEMPORARILY)	13 bar
1.4	CRACK OFF PRESSURE	≤ 0.4 bar
1.5	NOMINAL FLOW DIAMETER (WITH VOSS CONNECTION)	Ø10 mm
1.6	NOISE LEVEL FITTED WITH SILENCER	≤ 72 dB(A)
1.7	THERMAL RANGE OF APPLICATION	-40° C to +80° C
1.8	INSTALLATION POSITION	REFER FIGURE U
2	QUALITY COMPLIANCE TESTS WILL BE CARRIED OUT REGULARLY AS PER PS CLAUSE No. 16	
3	SERVICE LIFE TO FIRST OVERHAUL IF FITTED AS PER RECOMMENDED LAYOUT 3 YEARS / 300 000 km WHICHEVER IS EARLIER	
4	OPEN PORTS AND CONNECTIONS ARE FITTED WITH CLOSURE PLUGS/SLEEVE FOR STORAGE AND TRANSIT PURPOSES	

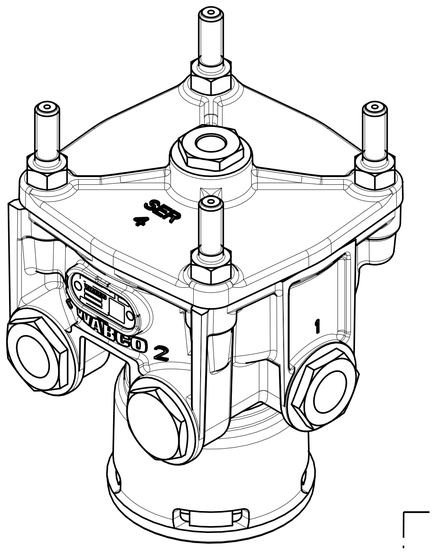

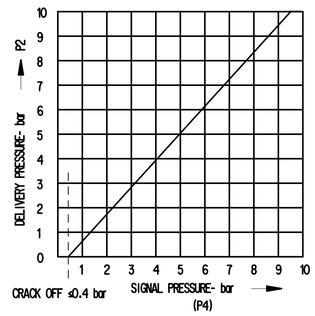

PRESSURE CHANGE RATE 0.137 bar/sec AS PER SAE J1859

PART CODE	MATERIAL	SURFACE PROTECTION
XVII	STEEL	NO TREATMENT
XVI	CAST IRON	PLATED
XV	STEEL	ZINC IRON PLATED
XIV	CAST IRON	NO TREATMENT
XIII	ZINC ALLOY	ANODISED
XII	PLASTIC	NO TREATMENT
XI	RUBBER	NO TREATMENT
X	STAINLESS STEEL	NO TREATMENT
IX	BRASS	NO TREATMENT
VIII	ZINC ALLOY	CHROMATED
VII	ALUMINIUM ALLOY	ANODISED
VI	ALUMINIUM ALLOY	CHROMATED
V	CAST IRON	PAINTED
IV	STEEL	POWDER COATED
III	STEEL	PAINTED
II	STEEL	PHOSPHATED
I	STEEL	ZINC PLATED

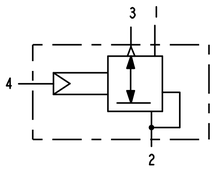

1. SUPPLY
2. DELIVERY
3. EXHAUST
4. CONTROL

	1	2	3
THREAD TYPE	M22x1.5, HEX. 24 TO SUIT VOSS PLUG IN SYSTEMS 230	M16x1.5, HEX. 19 TO SUIT VOSS PLUG IN SYSTEMS 230	M8x1.25, HEX. 13 NUT (CLASS 8.8) CUSTOMER TO ENSURE TORQUE
PERMISSIBLE TORQUE	10±1 N-m	10±1 N-m	22.5±2.5 N-m

General Specification: ISO 8015, JED-334-1, Size ISO 14405 LP
Further Technical Data: PSSC 225C
Doc. Code: O35 | Sheet: 1 | To: 10

General Tolerances JED-261

Class 1)	≤ 50	> 50 ≤ 180	> 180 ≤ 400	> 400	∢
Fine	±0.5	±1	±1.5	±2	±3°
Medium X	±1	±2	±3	±4	
Coarse	±2	±3.5	±5	±6.5	

Range of nominal dimensions in mm

Tapped Holes acc. JED-388
1) Tolerance Class Applied Crossmarked

B

Copyright ZF®

Date	Signature
Drawn 2025-04-03	Prasanna
Checked 2025-04-04	Balakrishnan

Dimensions in mm

RELAY VALVE - R12

Mass	Scale	Material No.	Date of first issue: 2019-09-18
0.93 kg	1:1 2:1	973 298 164 0	Doc.Code 005 / Language EN / Sheet 1/1
Size A 1	CAD System CREO	ECN-No. 517930 / Revision 4 B / Techn. Resp. 5220_WIN	Replacement for

100mm

Non è permesso consegnare a terzi o riprodurre questo documento, né utilizzare il contenuto o renderlo comunque noto a terzi senza autorizzazione. Eventuali violazioni comportano il risarcimento dei danni. È riservato il diritto di registrazione di brevetto, di marchio o di modello.

Copying of this document and giving it to others and the use or communication of the contents thereof, are forbidden without express authority. Offenders are liable to the payment of damages. All rights are reserved in the event of the grant of patent or registration of a utility model or design. This document is the subject of copyright.

Toute Communication ou reproduction de ce document, toute exploitation ou communication de son contenu sont interdites, sauf autorisation écrite. Tout manquement expose à un dédommagement. Tous droits de propriété industrielle réservés, notamment en matière de brevets et de modèles.

Weitergabe sowie Vervielfältigung dieser Unterlage, Verwertung und Mitteilung ihres Inhalts nicht gestattet, soweit nicht ausdrücklich zugestanden. Zuwiderhandlungen verpflichten zu Schadensersatz. Alle Rechte vorbehalten für Patentanmeldungen oder Eintragung von Gebrauchsmuster und verpflichten zu Schadensersatz.