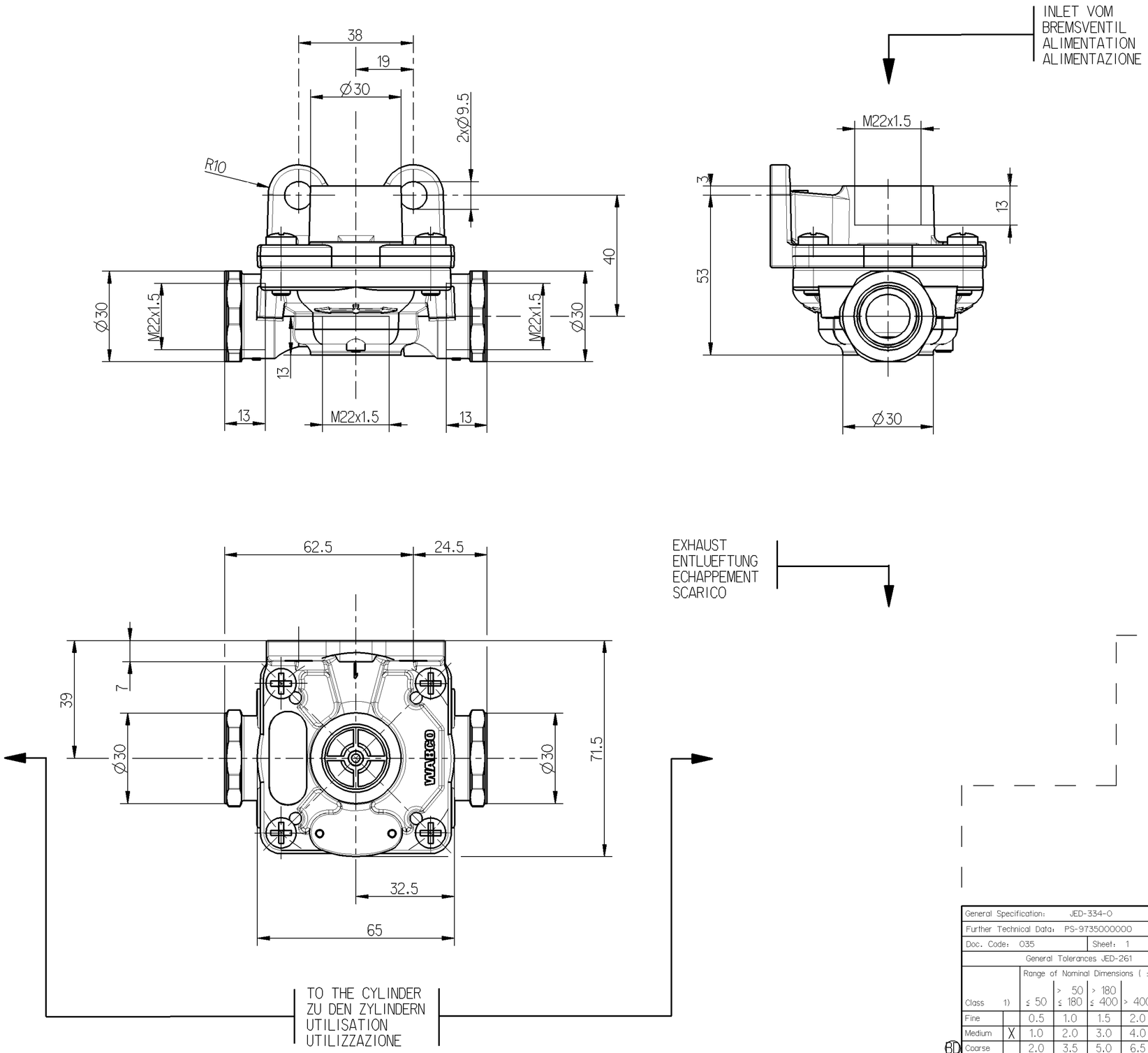

FUNCTION OF THE DEVICE ZWECK DES GERATES FONCTION DE L'APPAREIL FUNZIONE DELL'APPARECCHIO	QUICK RELEASE VALVE SCHNELL-LOESEVENTIL VALVE DE DESSERRAGE RAPIDE VALVOLA DI SERENATURA RAPIDO
MEDIUM MEDIUM FLUIDE FLUIDO	AIR LUFT AIR ARIA
MAX FREE PASSAGE MAX FREIER DURCHGANG PASSAGE LIBRE MAXI PASSAGIO LIBERO MASSIMO	Ø14 mm = 154 mm2
SERVICE PRESSURE BETRIEBSDRUCK PRESSION DE SERVICE PRESSIONE D'ESERCIZIO	MAXI = 12 bar
ADMISSIBLE TEMPERATURES THERM ANWENDUNGSBEREICH TEMPERATURE DE SERVICE TEMPERATURA D'ESERCIZIO	-40°C +80°C

General Specification: JED-334-0						
Further Technical Data: PS-9735000000						
Doc. Code: 035		Sheet: 1 To 3				
General Tolerances JED-261						
		Range of Nominal Dimensions (± mm)				
Class 1)		≤ 50	> 50 ≤ 180	> 180 ≤ 400	> 400	∢
Fine		0.5	1.0	1.5	2.0	±3°
Medium	X	1.0	2.0	3.0	4.0	
Coarse		2.0	3.5	5.0	6.5	
Tapped Holes acc. ISO4039/JED-152						
1) Tolerance Class Applied Crossmarked						

Copyright WABCO®

Date	Signature
Drawn 2010-12-15	Damek
Checked 2011-06-02	Sutor
Expert Szyszka	BD

WABCO

QUICK RELEASE VALVE
SCHNELL-LOESEVENTIL
VALVOLA DI SFRENATURA RAPIDO
VALVE DE DESSERRAGE RAPIDE

Mass	Scale	Material No.	Date of first issue: 79.05.28		
0.3 KG	1:1	973 500 000 0	Doc.Code 005	Language ML	Sheet 1/1
Size A 2	CAD System Pro/E	ECN-No. 154141	Revision 3 BD	Techn. Resp. 5311	Replacement for -

100mm

Toute Communication ou reproduction de ce document, toute exploitation ou communication de son contenu sont interdites, sauf autorisation expresse. Tout manquement à cette règle constitue un abus évident et expose son auteur au versement de dommages et intérêts. Tous droits de propriété industrielle réservés, notamment en matière de brevets et de modèles.

Weitergabe sowie Vervielfältigung dieser Unterlage, Verwertung und Mitteilung ihres Inhalts nicht gestattet, soweit nicht ausdrücklich zugestanden. Zuwiderhandlungen stellen einen offensichtlichen Missbrauch dar und verpflichten zu Schadenersatz. Alle Rechte für den Fall der Patenterteilung oder Gebrauchsmuster-Eintragung vorbehalten.

Non è permesso consegnare a terzi o riprodurre questo documento, né utilizzarne il contenuto o renderlo comunque noto a terzi senza autorizzazione esplicita. Ogni infrazione costituirà un evidente abuso e comporterà il risarcimento dei danni subiti. E' fatta riserva di tutti i diritti derivanti da brevetti o modelli.

Copying of this document and giving it to others and the use or communication of the contents thereof, are forbidden without express authority. Contravention of this restriction will constitute an evident abuse and result in a liability to the payment of damages. All rights are reserved in the event of the grant of patent or registration of a utility model or design. This document is the subject of copyright.