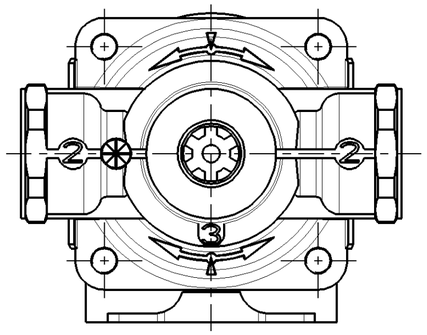

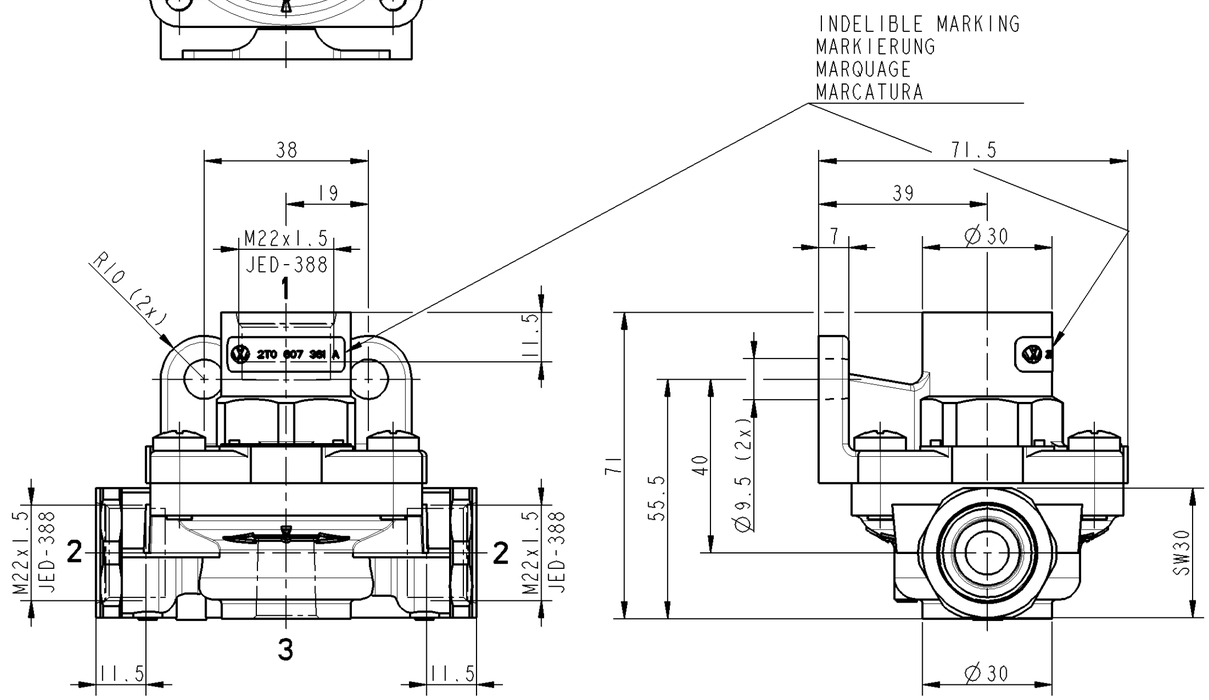


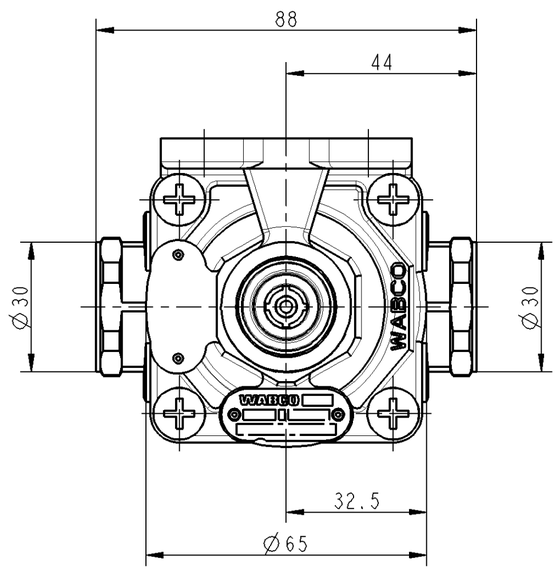


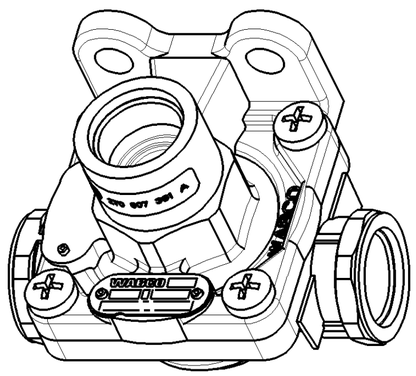


| | |
|---|---|
| SUPPLY PRESSURE<br>VORRATSDRUCK<br>PRESSION PNEUMATIQUE D'ALIMENTATION<br>PRESSIONE PNEUMATICA DI ALIMENTAZIONE | 10 bar MAX. |
| CONTROL FLUID<br>STEUERMEDIUM<br>FLUIDE COMMANDE<br>FLUIDO DI COMANDO | AIR<br>LUFT<br>AIR<br>ARIA |
| MAX FREE PASSAGE<br>MAX FREIER DURCHGANG<br>PASSAGE LIBRE MAXI<br>PASSAGIO LIBERO MASSIMO | Ø 10mm = 78.5mm$^2$ MAX. |
| THERMAL RANGE OF APPLICATION<br>THERMISCHER ANWENDUNGSBEREICH<br>GAMME D'UTILISATION THERMIQUE<br>TEMPERATURA DI ESERCIZIO | -40°C...+80°C |

| MARKING OF PORTS<br>ANSCHLUSSKENNZEICHNUNG<br>MARQUAGE DES ORIFICES<br>MARCATURA DEGLI ORIFIZI | | TORQUE FOR CONNECTIONS<br>ANZUGSMOMENT FUER SCHRAUSTUTZEN<br>COUPLE DE SERRAGE DES RACCORDS<br>COPPIA DI SERRAGGIO DEI RACCORDI |
|---|---|---|
| 1 | SUPPLY<br>VORRAT<br>ALIMENTATION<br>ALIMENTAZIONE | 53 Nm MAX. |
| 2 | DELIVERY<br>AUSGESTEUERTE LUFT<br>UTILISATION<br>UTILIZZAZIONE | 53 Nm MAX. |
| 3 | AIR EXHAUST<br>ENTLUEFTUNG<br>ECHAPPEMENT<br>SCARICO | 53 Nm MAX. |

SYMBOL
SINNBILD
SYMBOLE
SIMBOLO

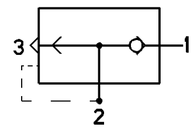


| DCN-No. | Rev. | Date |
|---|---|---|
| | | |
| | | |
| | | |

State of Revision

General Specification: JED-334-0
Further Technical Data:
Doc. Code: Sheet: To

General Tolerances JED-261

| Class 1) | | Range of Nominal Dimensions ( ± mm) ≤ 50 | > 50 ≤ 180 | > 180 ≤ 400 | > 400 | ∢ |
|---|---|---|---|---|---|---|
| Fine | | 0.5 | 1.0 | 1.5 | 2.0 | |
| Medium | X | 1.0 | 2.0 | 3.0 | 4.0 | ±3° |
| Coarse | | 2.0 | 3.5 | 5.0 | 6.5 | |

Tapped Holes acc. JED-388
1) Tolerance Class Applied Crossmarked

Copyright WABCO ®

| | Date | Signature |
|---|---|---|
| Drawn | 2007-12-17 | Nunes |
| Checked | 2007-12-19 | Sutor |
| Expert | Zgarda | |

**WABCO**

QUICK RELEASE VALVE
SCHNELL-LOESEVENTIL
VALVE DE DESSERAGE RAPIDE
VALVOLA DI SFRENATURA RAPIDO

| Mass | Scale | Material No. | WABCO Id. No.: 9735000600 | | |
|---|---|---|---|---|---|
| 0.27 KG | 1 : 1 | 973 500 060 0 | Doc.Code 005 | Language en/de fr/it | Sheet 1/1 |
| Size A 2 | TRI 530 | | Function Code - | CAD System Pro/E | Prod.Type 0 0 X |
| | | | Replacement for 884 501 938 0 | | |

100mm

Toute Communication ou reproduction de ce document, toute exploitation ou communication de son contenu sont interdites, sauf autorisation expresse. Tous droits de propriétés industrielles réservés, notamment en matière de brevets et de modèles.

Weitergabe sowie nicht autorisierte Verwendung dieser Unterlage, Verwertung und Mitteilung ihres Inhalts nicht gestattet, soweit nicht ausdrücklich zugestanden. Zuwiderhandlungen stellen einen öffentlichen Wettbewerb dar und verpflichten zu Schadensersatz. Alle Rechte für den Fall der Patenterteilung oder Gebrauchsmuster-Eintragung vorbehalten.

Non è permesso consegnare a terzi o riprodurre questo documento, né utilizzarne il contenuto o renderlo comunque noto a terzi senza autorizzazione esplicita. Ogni infrazione costituisce un evidente abuso e comporterà il risarcimento dei danni subiti. Ci riservo i diritti derivanti da brevetti o modelli.

Copying of this document and giving it to others and the use or communication of the contents thereof, are forbidden without express authority. Offenders are liable to the payment of damages. All rights are reserved in the event of the grant of patent or registration of a utility model or design. This document is the subject of copyright.