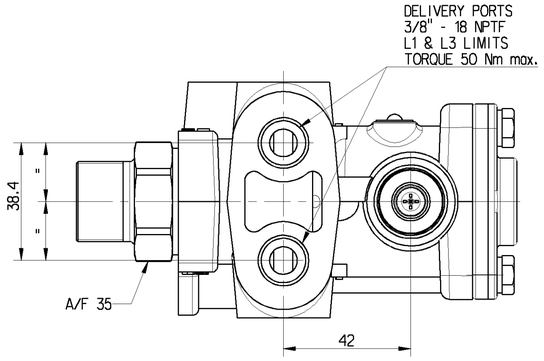

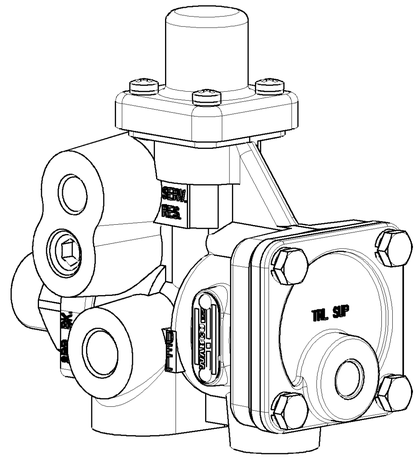

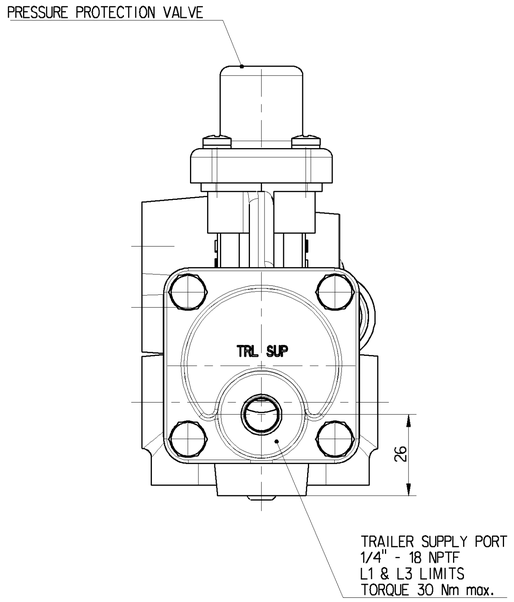

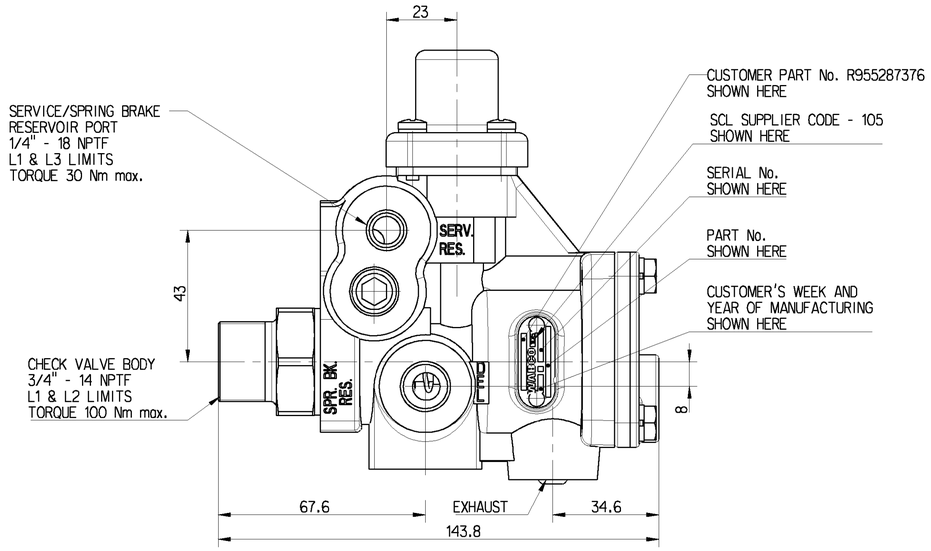

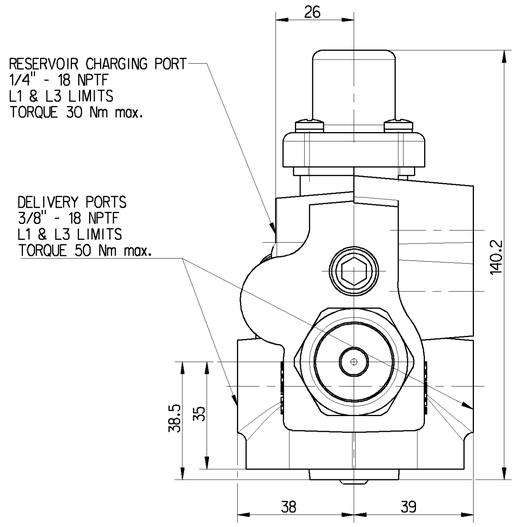

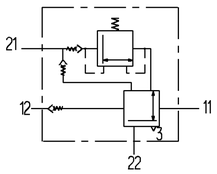

11. TRAILER SUPPLY LINE
12. SPRING BRAKE RESERVOIR
21. DELIVERY (SERVICE RESERVOIR)
22. DELIVERY
3. EXHAUST

TECHNICAL DATA:

WORKING MEDIUM : AIR

THERMAL RANGE OF APPLICATION : -40°C TO +80°C

MAX WORKING PRESSURE : 9.4 bar

INSTALLATION POSITION : OPTIONAL

OPEN PORTS ARE TO BE FITTED WITH CLOSURE PLUGS

AND MALE THREADS ARE TO BE FITTED WITH CLOSURE SLEEVE

FOR STORAGE AND TRANSIT PURPOSES.

General Specification: JED-334-O						
Further Technical Data: 973 880 001 0						
Doc. Code: 035			Sheet: 1 To 7			
General Tolerances JED-261						
		Range of Nominal Dimensions (± mm)				
Class 1)		≤ 50	> 50 ≤ 180	> 180 ≤ 400	> 400	∢
Fine		0.5	1.0	1.5	2.0	±3°
Medium	X	1.0	2.0	3.0	4.0	
Coarse		2.0	3.5	5.0	6.5	
Tapped Holes acc.						
1) Tolerance Class Applied Crossmarked						

Copyright WABCO®

WABCO

Date	Signature
Drawn 2011-08-08	Sripathy
Checked 2011-08-08	Sathesh
Expert	Ganesamoorthy

(B)

SBV2 - SPRING BRAKE CONTROL VALVE

Mass	Scale	Material No.	Date of first issue: Doc.Code	Language	Sheet
1.3 KG	1:1	973 880 001 0	005	EN	1/1

Size	CAD System	ECN-No.	Revision	Techn. Resp.	Replacement for
A 1	Pro/E	156208	1 B	5240_WIN	N304131

100mm

Toute Communication ou reproduction de ce document, toute exploitation ou communication de son contenu sont interdites, sauf autorisation écrite. Tout manquement expose son auteur au paiement de dommages et intérêts. Tous droits de propriété industrielle réservés, notamment en vertu de brevets et de modèles.

Weitergabe sowie Vervielfältigung dieser Unterlage, Verwertung und Mitteilung ihres Inhalts nicht gestattet, soweit nicht ausdrücklich zugestanden. Zuwiderhandlungen verpflichten zu Schadensersatz. Alle Rechte für den Fall der Patent-, Gebrauchsmuster- oder Geschmacksmustereintragung vorbehalten.

Non è permesso consegnare o farne la copia o riprodurre questo documento, né utilizzare il contenuto o renderlo comunque noto a terzi senza esplicita autorizzazione. Chi ne fosse responsabile sarà tenuto al risarcimento dei danni. Si riserva il diritto di brevetto o modello.

Copying of this document and giving it to others and the use or communication of the contents thereof, are forbidden without express authority. Offenders are liable to the payment of damages. All rights are reserved in the event of the grant of patent or registration of a utility model or design. This document is the subject of copyright.