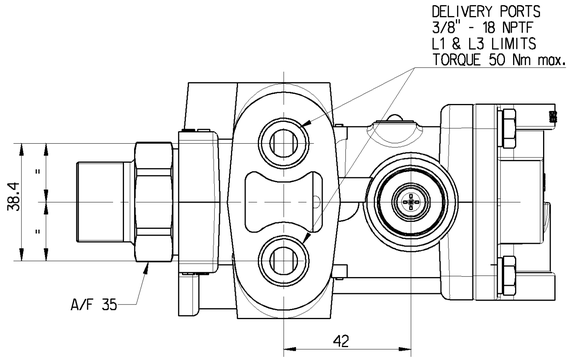

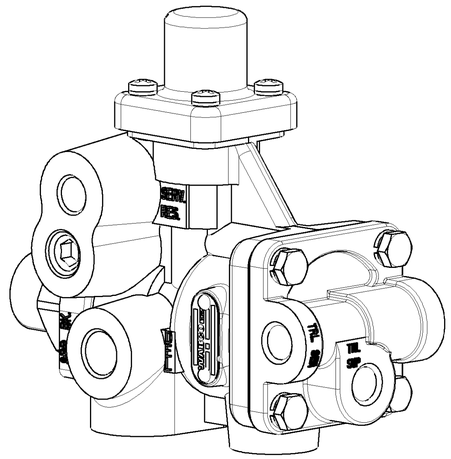

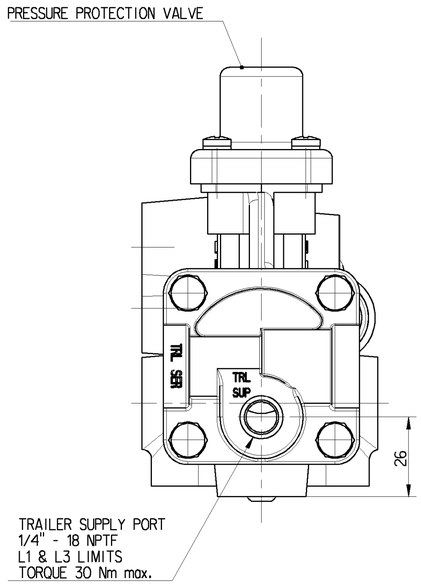

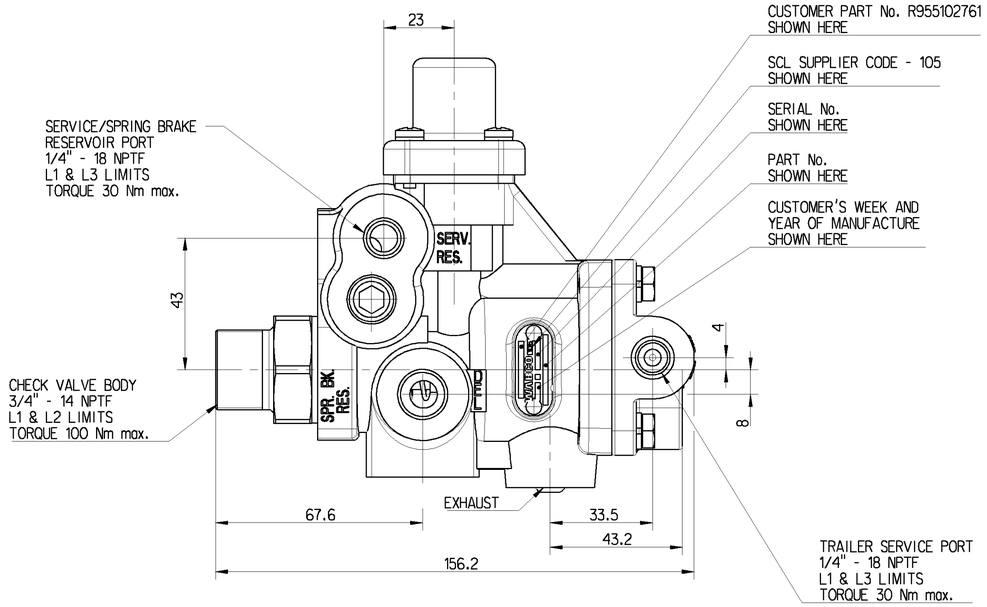

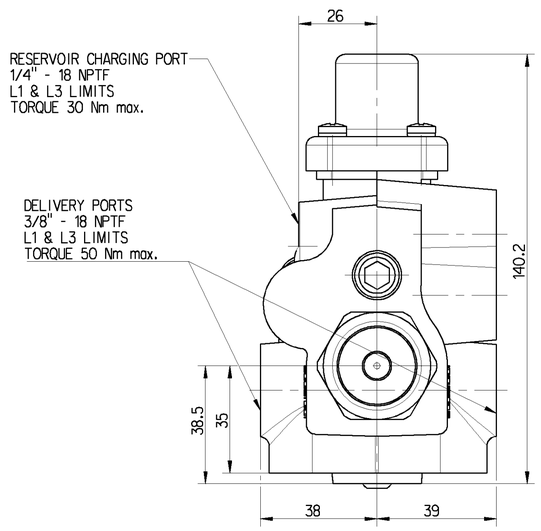

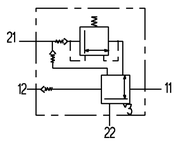

11. TRAILER SUPPLY LINE
12. SPRING BRAKE RESERVOIR
21. DELIVERY (SERVICE RESERVOIR)
22. DELIVERY
3. EXHAUST

TECHNICAL DATA:

WORKING MEDIUM : AIR

THERMAL RANGE OF APPLICATION : -40°C TO +80°C

MAX WORKING PRESSURE : 9.4 bar

INSTALLATION POSITION : OPTIONAL

OPEN PORTS ARE TO BE FITTED WITH CLOSURE PLUGS
AND MALE THREADS ARE TO BE FITTED WITH CLOSURE SLEEVE
FOR STORAGE AND TRANSIT PURPOSES.

General Specification: JED-334-O							
Further Technical Data: 973 881 001 0							
Doc. Code: 035				Sheet: 1 To 7			
General Tolerances JED-261							
Range of Nominal Dimensions (± mm)							
Class 1)		≤ 50	> 50 ≤ 180	> 180 ≤ 400	> 400	∡	
Fine		0.5	1.0	1.5	2.0		
Medium	X	1.0	2.0	3.0	4.0	±3°	
Coarse		2.0	3.5	5.0	6.5		
Tapped Holes acc.							
1) Tolerance Class Applied Crossmarked							

Copyright WABCO®

WABCO

Date	Signature
Drawn 2011-08-08	Sripathy
Checked 2011-08-08	Sathesh
Expert Ganesamoorthy	

(B)

SBV2 - SPRING BRAKE CONTROL VALVE

Mass	Scale	Material No.	Date of first issue		
1.3 KG	1:1	973 881 001 0	Doc.Code 005	Language EN	Sheet 1/1
Size A 1	CAD System Pro/E				

ECN-No.	Revision		Techn. Resp.	Replacement for
156208	1	B	5240_WIN	M304141

100mm

Non è permesso consegnare a terzi o riprodurre questo documento, né utilizzarne il contenuto o renderlo comunque noto a terzi senza espressa autorizzazione della Società proprietaria. Il documento è stato rilasciato solo a competenza e fine esclusivo della Società.
E'fatto riserva di tutti i diritti derivanti da brevetti o modelli.

Copying of this document and giving it to others and the use or communication of the contents thereof, are forbidden without express authority. Offenders are liable to the payment of damages. All rights are reserved in the event of the grant of patent or registration of a utility model or design. This document is the subject of copyright.

Toute Communication ou reproduction de ce document, toute exploitation ou communication de son contenu sont interdites, sauf autorisation écrite. Les contrevenants sont tenus au paiement de dommages-intérêts. Tous droits de propriété industrielle réservés, notamment en matière de brevets et de modèles.

Weitergabe sowie Vervielfältigung dieser Unterlage, Verwertung und Mitteilung ihres Inhalts nicht gestattet, soweit nicht ausdrücklich zugestanden. Zuwiderhandlungen verpflichten zu Schadenersatz. Alle Rechte vorbehalten für Patent- oder Gebrauchsmustererteilung und -verwertung.